AXMINSTER PROFESSIONAL

Code 107625

AP430DS
Drum Sander

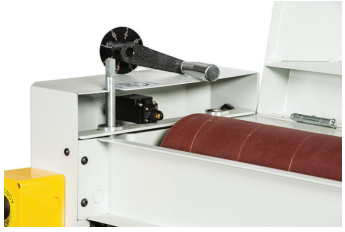

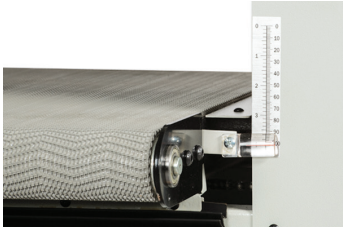

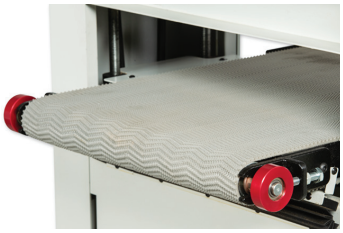

AXMINSTER THREE YEAR GUARANTEE

AT: 07/09/2021
BOOK VERSION: 2

Cert No: YES-DS17

Axminster Tool Centre Ltd
Axminster Devon
EX13 5PH UK
axminstertools.com

declares that the machinery described:-

Type	**Drum Sander**
Model	**AP430DS**

Signed

Andrew Parkhouse
Operations Director Date: **16/05/2019**

EU Declaration of Conformity

This machine complies with the following directives:

2006/42/EC
2006/95/EC
EN ISO 12100: 2010
EN 60204-1: 2018

EN ISO 1200-1:2003
EN ISO 12100-2:2003
EN ISO 1050: 1996
EN 60204-1: 2006

and conforms to the machinery example for which the
EC Type-Examination Certificate No YES-2019001-A1
has been issued by **YEOU EIR SHUEN MACHINERY CO., LTD**
at: No. 111-11, Yung He Rd., Da Ya Dist., 42877 Taichung City, Taiwan

and complies with the relevant essential health and safety requirements.

PREFACE

We appreciate your purchase of our machine. This machine is designed and manufactured for efficient, heavy-duty operations. This manual concerns the operation, safety and maintenance of the machine. This manual should be kept readily available to the operator for reference. The operator should read this manual ca refully before operation to ensure safe, smooth operation of the machine. Our warranty will not apply if there is any improper operation or maintenance of the machine.

When you receive the machine, please check the model, all accessories listed on the packing list and check if there are any parts damaged during transportation. If any part is missing or parts are found to be damaged, please immediately contact your local distributor or machine manufacturer. Again, we would like to thank you for your purchase.

WARRANTY

If any part is proved to is defective within ONE YEAR from the date of purchase then the manufacturer or distributor shall repair or replace the part provided the defective part is returned immediately to the manufacturer or distributor. The manufacturer or distributor shall have no obligation to repair or replace those parts failing due to operator carelessness, misuse or due to any cause such as parts failing due to poor lubrication, inadequate cleaning, improper operating environment, improper utilities or operator error

TABLE OF CONTENTS

1. SAFETY REGULATIONS

1.1 SAFETY REGULATIONS

WARNING: FAILURE TO FOLLOW THESE RULES MAY RESULT IN SERIOUS PERSONAL INJURY.

1. **FOR YOUR OWN SAFETY, READ INSTRUCTION MANUAL BEFORE OPERATING THE TOOL.** Learn the tool's application and limitations as well as the specific hazards peculiar to it.
2. **KEEP GUARDS IN PLACE** and in working order.
3. **ALWAYS WEAR EYE PROTECTION.** Wear safety glasses. Everyday eyeglasses only have impact resistant lenses; they are not safety glasses. Also use face or dust mask if cutting operation is dusty. These safety glasses must conform to ANSI Z87.1 requirements.
   Note: Approved glasses have Z87 printed or stamped on them.
4. **REMOVE ADJUSTING KEYS AND WRENCHES.** Form habit of checking to see that keys and adjusting wrenches are removed from tool before turning it on.
5. **KEEP WORK AREA CLEAN.** Cluttered areas and benches invite accidents.
6. **DON'T USE IN DANGEROUS ENVIRONMENT.** Don't use power tools in damp or wet locations, or expose them to rain. Keep work area well lighted.
7. **KEEP CHILDERN AWAY.** All visitors should be kept safe distance from work area.
8. **MAKE WORKSHOP KID PROOF** with padlocks, master switches, or by removing starter keys.
9. **DON'T FORCE TOOL** it will do the job better and safer at the rate for which it was not designed.
10. **USE RIGHT TOOL.** Don't force tool or attachment to do a job for which it was not designed.
11. **USE PROPER EXTENSION CORD**. Make sure your extension cord is in good condition. When using an extension cord, be sure to use one heavy enough to carry the current your product will draw. An undersized cord will cause a drop in line voltage resulting in loss of power and overheating. Table 1 shows the correct size to use depending on cord length and nameplate ampere rating. If in doubt, use the next heavier gage. The smaller the gage number, the heavier the cord.
12. **WEAR PROPER APPAREL** Do not wear loose clothing, gloves, neckties, rings, bracelets, or other jewelry which may get caught in moving parts. Nonslip footwear is

recommended. Wear protective hair covering to contain long hair.

13. **ALWAYS USE SAFETY GLASSES.** Also use face or dust mask if cutting operation is dusty. Everyday eyeglasses only have impact resistant lenses, they are NOT safety glasses.
14. **SECURE WORK.** Use clamps or a vise to hold work when practical. It's safer than using your hand and it frees both hands to operate tool.
15. **DON'T OVERREACH.** Keep proper footing and balance at all times.
16. **MAINTAIN TOOLS WITH CARE.** Keep tools sharp and clean for best and safest performance. Follow instructions for lubricating and changing accessories.
17. **DISCONNECT TOOLS** before servicing; when changing accessories, such as blades, bits, cutters, and the like.
18. **REDUCE THE RISK OF UNINTENTIONAL STARTING.** Make sure switch is in off position before plugging in.
19. **USE RECONNENDED ACCESSORIES.** Consult the owner's manual for recommended accessories. The use of improper accessories may cause risk of injury or persons.
20. **NEVER STAND ON TOOL** Serious injury could occur if the tool is tipped or if the cutting tool is unintentionally contacted.
21. **CHECK DAMAGED PARTS.** Before further use of the tool, a guard or other part that is damaged should be carefully checked to determine that it will operate properly and perform its intended function-check for alignment of moving parts, binding of moving parts, breakage of parts, mounting, and any other conditions that may affect its operation. A guard or other part that is damaged should be properly repaired or replaced.
22. **DIRECTION OF FEED.** Feed work into a blade or cutter against the direction of rotation of the blade or cutter only.
23. **NEVER LEAVE TOOL RUNNING UNATTENDED. TURN POWER OFF.** Don't leave tool until it comes to a complete stop.
24. **MAME SURE TOOL IS DISCONNECTED** from power supply while motor is being mounted, connected or reconnected.

1.1.1. GENERAL SAFETY RULES

WARNING **Do not attempt to operate until you have read thoroughly and understand completely all instructions, rules, etc. contained in this manual. Failure to comply can result in accidents involving fire, electric shock, or serious personal injury. Keep owners manual and review frequently for continuous safe operation.**

1. **KNOW YOUR MACHINE.**
   For your own safety, read the owner's manual carefully. Learn its application and limitations as well as specific potential hazards pertinent to this machine.

2. **KEEP GUARDS IN PLACE AND IN WORKING ORDER.**

3. **REMOVE ADJUSTING KEYS AND WRENCHES.**
   For habit of checking to see that keys and adjusting wrenches are remove from the machine before turning it on.

4. **KEEP WORK AREA CLEAN.**
   Cluttered areas and benches invite accidents.

5. **DO NOT USE IN DANGEROUS ENVIRONMENTS.**
   Do not use power tools in damp or we locations, or expose them to rain. Keeps work area well illuminated.

6. **KEEP CHILDREN AWAY.**
   All visitors should be kept at a safe distance from work area.

7. **MAKE WORKSHOP CHILDPROOF.**
   With padlocks, master switches, or by removing starter keys.

8. **DO NOT FORCE THE MACHINE.**
   It will do the job better and be safer at the rate for which it was designed.

9. **USE THE RIGHT TOOLS.**
   Do not force the machine or attachments to do a job for which they were not designed.

10. **WEAR PROPER APPAREL.**
    Avoid loose clothing, gloves, neckties, rings, bracelets, or jewelry, which could be caught in moving parts. Nonslip footwear is recommended. Wear protective hair covering to contain long hair.

11. **SECURE WORK.**
    Use clamps or a vice to hold work when practical. It is safer than using your

hand and frees both hands to operate the machine.

12. **DO NOT OVERREACH.**
    Keep proper footing and balance at all times.

13. **MAINTAIN MACHINE IN TOP CONDITION.**
    Keep machine clean for best and safest performance. Follow instructions for lubricating and changing accessories.

14. **DISCONNECT MACHINE FROM POWER SOURCE.**
    Before servicing and when changing accessories, or when mounting and remounting motor.

15. **USE RECOMMENDED ACCESSORIES.**
    Consult the owner's manual for recommended accessories.

16. **NEVER LEAVE MACHINE RUNNING UNATTENDED.** When the power is turned off, do not leave the machine until it comes to a complete stop.

17. **AVOID ACCIDENTAL STARTING.** Make sure switch is in “ OFF ” position before plugging in cord. Never clean or remove chips while the machine is running.

18. **WARNING LABELS.** Do not remove or alter warning labels and replace any that become obscured.

1.2 WARNING PLATES

This machine has warning symbols attached on it as shown below to ensure proper and safe operation.

These symbols are used on the machine to indicate points or instances of specific danger to operating personnel.

Make sure to memorize these symbols and bring them to the attention of others as and when necessary. **Do not remove safety symbols from the machine.**

2. SPECIFICATIONS

2.1 SPECIFICATIONS

	AT430DS
Main Motor	1.5HP,1PH
Conveyor Motor	DC 90W
Max. Sanding Width	17”
Max. Material Thickness	4”
Min. Material Thickness	1/8”
Minimum Stock Length	8”
Conveyor Belt Speeds	0-22 FPM
Sanding Drum Speed	1720 RPM(2258 FPM)
Sanding Belt Size	3” roll
Min. Dust Collection Req.	750 CFM
Dust Collection Port	4”
Weight	94/104 KGS (222 Lbs)

All specifications, dimensions and design characteristics shown in this manual are subject to change without notice.

2.2. MACHINE NOISE

DECLARED NOISE EMISSION VALUES in accordance with ISO 7960.

	Idling	Operating
Declared A-weighted Sound Power Level, Lward , in dB re 1 pW .	**A**	**C**
Declared A-Weighted Emission Sound Pressure Level , lpAd , in dB re 20 μPa , at the operator's position.	**B**	**D**

Values determined according to specific test code ISO 3746.

2.3. FUNCTION OF THE MACHINE

Variable Speed Conveyor
Steel Dust Scoop Maximizes Dust Collection Efficiency
Two Adjustable Pressure Rollers
Thickness Scale
Welded Steel Construction
Industrial-Duty Conveyor Belt
Uses standard Tape Sandpaper
Casting Iron Table

2.4 MACHINE DIMENSIONS

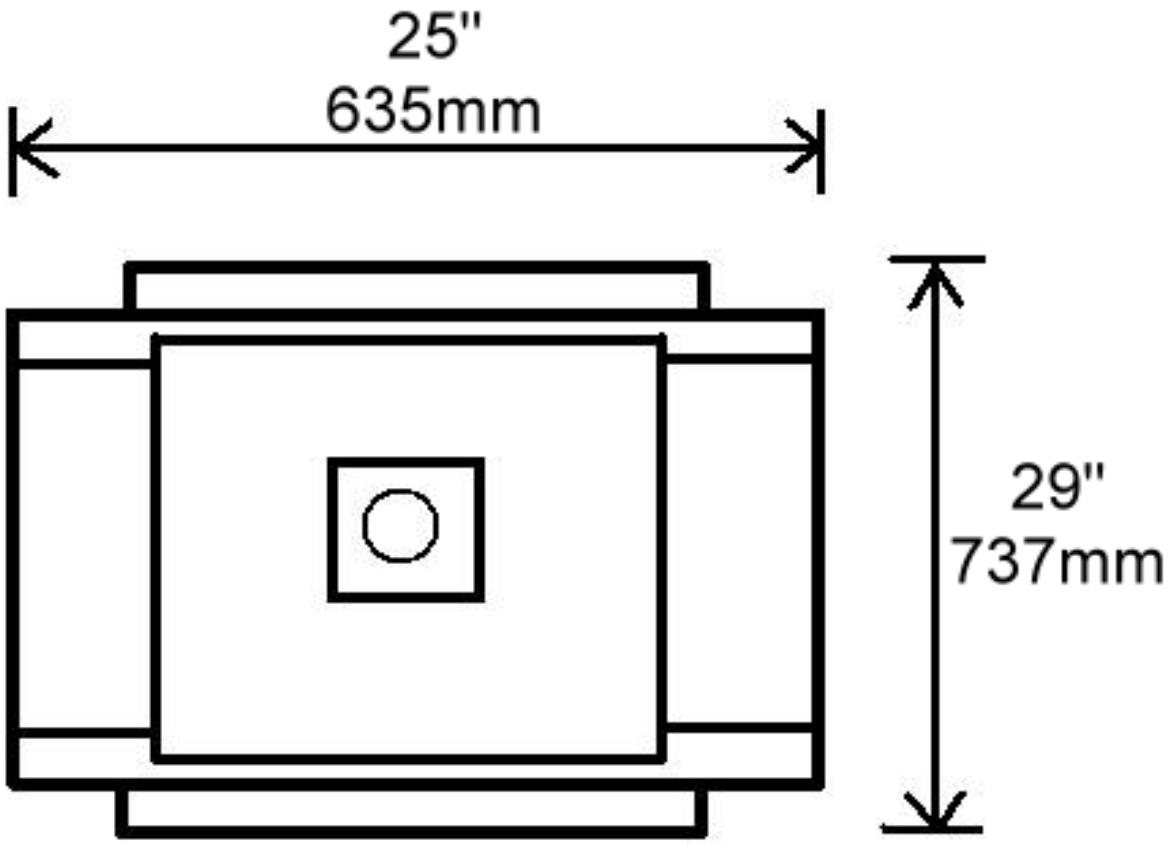

17”Drum sander

3. INSTALLAITON

3.1. SAFETY RULES FOR MACHINE LIFTING

1. Pay special attention to the balance of the machine while lifting.
2. Use a forklift with sufficient loading capacity to lift the machine.
3. Have another person help guide the way when lifting the machine.
4. The forks of forklift must protrude from under the machine underside.
5. The forklift must only be driven by an experienced forklift driver.

This is a heavy machine. Serious personal injury may occur if safe moving ethods are not used. To be safe, get assistance and use power equipment to move the shipping crate and remove the machine from the crate.

Although not required, we recommend that you mount your new machine to the floor. Because this is an optional step and floor materials may vary, floor mounting hardware is not included. Generally, you can either bolt your machine to the floor or mount it on machine mounts. Both options are described below. Whichever option you choose, it is necessary to level your machine with a precision level.

3.2. SELECTION OF LOCATION

Requirement of operating environment the operating temperature for this machine should be between +5℃ and +40℃,while the relative humidity should not exceed 50% at a maximum temperature of +40℃.

Improper environment will affect the machine's safe operation, avoid the following working area:

Avoid placing in area where the machine will rock or be uneven, thus preventing the machine from falling or turning over. This will prevent injuries and undue wear on the machine.

Avoid placing in places where vibration may occur. Install the machine at the anticipated place.

Whether there is any dust on the sliding surface or any defect. Clean it first to avoid setting off sparks or causing an electrical shock.

Space allocation

Consider the largest size of workpiece that will be processed through this machine and provide enough space around the machine for adequate operator material handing or the installation of auxiliary equipment. With permanent installations, leave

enough space around the machine to open or remove doors/covers as required by the maintenance and service described in this manual.

Electrical Installation

Place this machine near an existing power source. Make sure all power cords are protected from traffic, material handling, moisture, chemicals, or other hazards. Make sure to leave assess to a means of disconnection the power source or engaging a lockout/tagout device.

Lighting

Lighting around the machine must be adequate enough that operations can be performed safely. Shadows, glare, or strobe effects that may distract or impede the operator must be eliminated.

3.3. TRANSPORTATION

Carefully check over the machine whether it is damaged during transportation.

While moving the machine, be sure to note its weight distribution as well as its balance.

If the machine is damaged while being moved, please contact the manufacturer immediately.

The lifting of the machine is as easy as follows:

The machine can be lifted by a forklift.

Their forks should insert through the machine bottom.

Attention should be paid to the balance of the machine while lifting.

3.4. POWER SUPPLY REQUIREMENT

Insufficient voltage from factory power source may affect the power output of the motor and the function of the controller.

It is important to connect this machine to the correct voltage in the factory power source. Use only an independent power source.

3.7 CONNECT POWER SOURCE WIRES

1. Before connecting the power wires make sure the voltage between the machine and your factory power source is the same.
2. Take out the electrical cover at the electrical control box outside.
3. Connect the power wires to the plug.
4. The machine must be properly grounded to prevent possible injury from electrical shock.
5. Connect the power wires from machine bed to the electrical control box according connecter type.
6. **Qualified electrical personnel should perform all electrical connections.**

⚠ WARNING

Grounding should be based on the local regulations.

3.5 CHECK POWER WIRES CONNECTION

1. After the power wires have been connected it is necessary to check if the power wires are connected to the correct connection points.
2. Turn on **CONTROL** button at the electrical control box outside.
3. Turn this power switch “ON” to power the machine on the control panel.

3.6 SETUP

Site Considerations

Carefully unpack the Drum Sander from its crate and unsure that everything is in tact. When setting your machine in the desired location, make sure that you have enough machine clearance in order to use this machine to the full capacity.
See the figure below for the minimum working clearance.

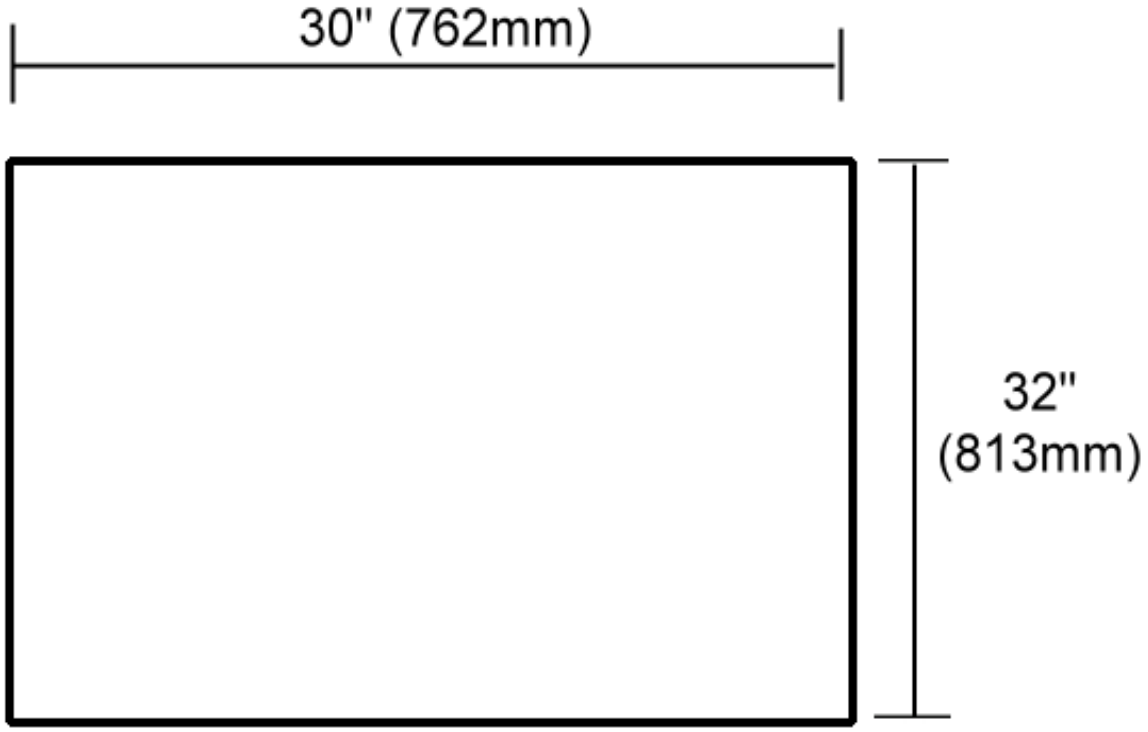

17” Drum Sander

NOTE – When moving this machine into its desired location please make sure that you do it with the help of another person. The machine is fairly heavy (185 lbs) and it is necessary to lift and or move this machine with the help of another person.

Inventory

The following is a description of the main components shipped with your machine. Lay the components out to inventory them.

Note: If you can't find an item on this list, check the mounting location on the machine or examine the packaging materials carefully. Occasionally we pre-install certain components for shipping purposes.

A. Drum Sander (not shown)..... 1pc

B. Handle……..…1pc

C. Crank Handle..... 1pc

D. Dust Port 4"..... 1pc (DS17….2pcs)

E. Hex Wrench 3mm (not shown)..... 1pc

F. Level plates (not shown)..... 2pcs

B

C

D

CRANK HANDLE

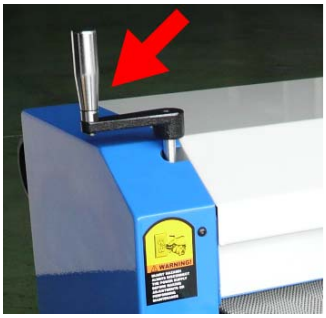

Now the crank handle that came with the machine needs to be installed. The handle should be installed on the top left side of the unit. Make sure that the set screws and handle are firmly in place before moving on.

DUST COLLECTION

It is highly recommended that you use a dust collector when using this machine. The minimum CFM requirement for this machine is 750CFM which means you should be using a 1HP or 2HP dust collector at minimum.

The machine comes with a 4” dust port located at the top of the machine.

You can use a dust collection adaptor which will take you up to 4” in order to use a normal sized dust collector. A fine layer of dust will

be present on your stock as it comes out from the sander. This is normal.

TEST RUN

Connect your machine to the correct power source. Once it is connected you are ready to perform the first test run. Take a careful look in and around your machine before turning it on to ensure everything is in place, all screws and knobs are securely fastened and that all controls are working properly.

Before turning the machine on, make sure you are wearing your safety glasses and that any one around you is also wearing safety glasses and not standing in the front or back of the machine.

Turn the power switch to **ON.**

The drum sander should run smoothly and create very little noise or vibration. If any loud or strange noises occur ***turn the machine OFF right away*** and inspect the problem. **DO NOT** make any adjustments while the machine is running.

4. OPERATION

4.1 BASIC CONTROLS

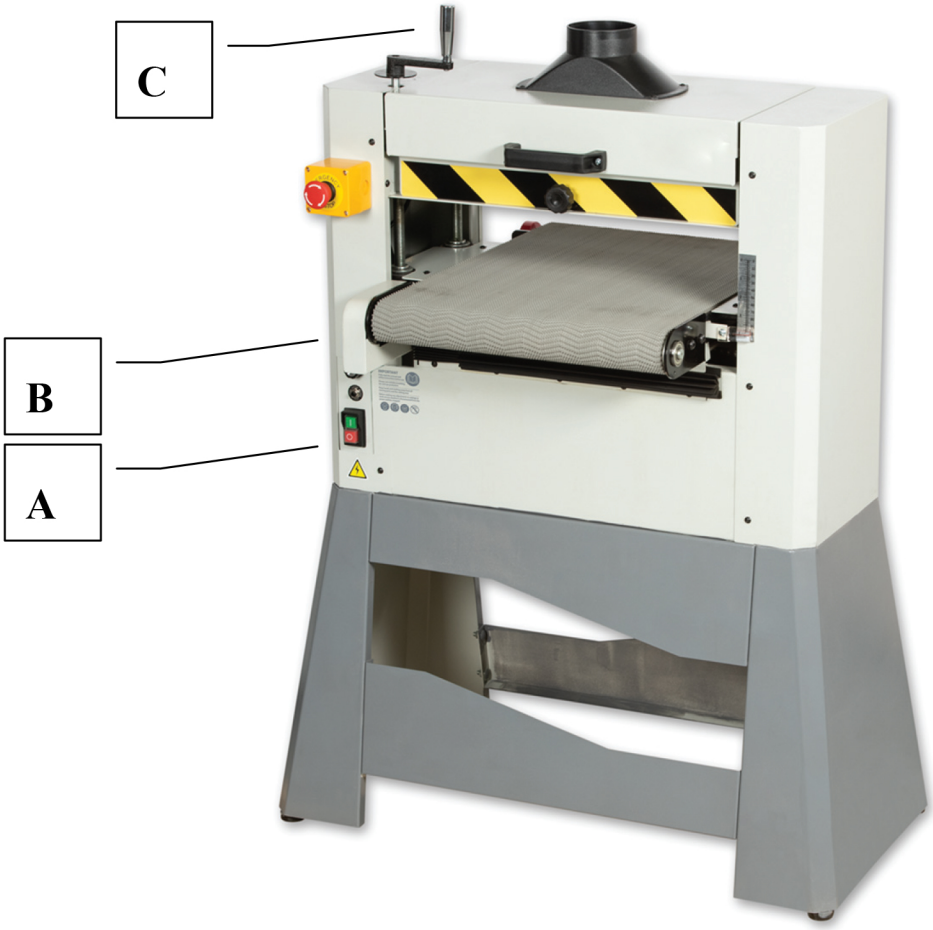

A. **Variable Speed Knob:** Adjusts feed rate from 0–22 FPM. Rotate clockwise to increase feed speed, rotate counterclockwise to decrease feed speed.

B. **ON/OFF SWITCH:** Turns motor ON/OFF.

C. **Hand Crank:** Used to raise or lower the conveyor table to control depth of cut. Each full rotation of the hand crank raises or lowers the conveyor table approximately 1/16" (1.58 mm).

4.2 OPERATION INSTRUCTION

Operation Overview

This overview gives you the basic process that happens during an operation with this machine.

Familiarize yourself with this process to better understand the remaining parts of the Operation section.

To complete a typical operation, the operator does the following:

1. Examines the workpiece to make sure it is suitable for sanding.
2. Places the workpiece on the conveyor table under or next to the front pressure roller, andadjusts the table height until the top surface of the workpiece just touches the front pressure roller.
3. Checks the outfeed side of the machine to make sure the workpiece can safely pass all the way through without interference from other objects.
4. Wears safety glasses and a respirator.
5. Starts the dust collector.
6. Turns the sander ***ON***, adjusts conveyor speed, places the workpiece flat on the conveyor, then lets the conveyor feed the workpiece into the sander.
7. Slowly raises the conveyor table using the hand crank until the sandpaper begins sanding the workpiece.
8. Stands at the side of the sander and retrieves the workpiece from the outfeed end.
9. Stops the machine.

Sanding Tips

- Replace the sandpaper with a higher grit to achieve a finer finish.
- Raise the table with a maximum of 1/8 turn of the crank handle until the workpiece is the desired thickness.
- Reduce snipe when sanding more than one board of the same thickness by feeding them into the sander with the front end of the second board touching the back end of the first board.
- Feed boards into the sander at different points on the conveyor to maximize sandpaper life and prevent uneven conveyor belt wear.
- DO NOT sand boards less than 8" long or less than 1/8" thick to prevent damage to the workpiece and the drum sander.
- When sanding workpieces with irregular surfaces, such as cabinet doors, take very light

sanding passes to prevent gouges. When the drum moves from sanding a wide surface to sanding a narrow surface, the load on the motor will be reduced, and the drum will speed up, causing a gouge.

- DO NOT edge sand boards. This can cause boards to kickback, causing serious personal injury. Edge sanding boards also can cause damage to the conveyor belt and sandpaper.
- When sanding workpieces with a bow or crown, place the high point up (prevents the workpiece from rocking) and take very light passes.
- Feed the workpiece at an angle to maximize stock removal and sandpaper effectiveness, but feed the workpiece straight to reduce sandpaper grit scratches for the finish passes.

Stock Inspection and Requirements

Some workpieces are not safe or may require modification before they are safe to sand.

Before sanding, inspect all workpieces for the following:

- ***Material Type:*** This machine is intended for ONLY sanding natural and man-made wood products. This machine is NOT designed to sand metal, glass, stone, tile, drywall or cementitious backerboard.
- ***Foreign Objects:*** Nails, staples, dirt, rocks and other foreign objects are often embedded in wood. While sanding, these objects can become dislodged and tear the sandpaper. Always visually inspect your workpiece for these items. If they can't be removed, DO NOT sand the workpiece.
- ***Excessive glue or finish:*** Sanding workpieces with excess glue or finish will loadup the abrasive, reducing its usefulness and lifespan.
- ***Workpiece Dimensions*****:** DO NOT sand boards less than 8" long, 2" wide and 1/8" thick to prevent damage to the workpiece to reduce the risk of your hands contacting the sandpaper.

Depth of Cut

The optimum depth of cut will vary based on the type of wood, feed rate, and sandpaper grit. Under most sanding conditions, the depth should not exceed 0.006" (0.15 mm) (approx. 1/8 turn of the handwheel). Each full turn of the crank handleraises the conveyor table approximately 1/16”(1.5 mm). Attempts to remove too much material can cause jamming, wood burning, rapid paper wear or tearing, poor finish, belt slippage, and motor damage.

To set the depth of cut:

1. Rotate the crank handle until the conveyor table is well below the sanding drum, place the workpiece on the table, then raise the table, until the front pressure roller just touches the top of the workpiece.

Note: *When adjusting the table to sand a thicker workpiece, lower and then raise the table to remove backlash from the adjustment mechanism. If the table is lowered too far, the*

conveyor belt may rub against the chain, leaving grease on the belt.

2. Turn the sander ***ON***, start the conveyor, and feed the workpiece into the sander. SLOWLY raise the conveyor table until the workpiece makes light contact with the sanding drum. This is the correct height to begin sanding the workpiece.

Variable Speed

The variable speed knob allows you to increase the feed rate from 0– 22 FPM. The correct speed to use depends on the type of stock you are using (hardwood vs. softwood) and the stage of finish you are at with that workpiece. As a general rule, a slower feed rate sands the surface smoother, but runs the risk of burning the wood; a faster feed rate removes material faster, but runs the risk of overloading the motor. Use trial-and-error to determine the best settings for your specific applications.

To adjust the conveyor speed:

1. Start the conveyor.

2. Rotate the variable speed knob clockwise to increase the feed speed, or counterclockwise to decrease the feed speed.

Choosing Sandpaper

There are many types of sanding belts to choose from. We recommend aluminum oxide for general workshop environments. Below is a chart that groups abrasives into different classes, and shows which grits fall into each class.

Grit	Class	Usage
36	Extra Coarse	Rough sawn boards, thickness sanding, and glue removal.
60	Coarse	Thickness sanding and glue removal.
80-100	Medium	Removing planer marks and initial finish sanding.
120-180	Fine	Finish sanding.

The general rule of thumb is to sand a workpiece with progressively higher grit numbers, with no one grit increase of more than 50. Avoid skipping grits; the larger the grit increase, the harder it will be to remove the scratches from the previous grit. Ultimately, the type of wood you use and your stage of finish will determine the best grit types to install on your sander.

Paper Replacement

1. Disconnect the sander from the powersource!
2. Open the top cover to expose the drum.
3. Unwind the old sandpaper and notice the direction that it was wrapped around the drum.
4. Use the old sandpaper as a pattern to cutout the new sandpaper, or use the pattern in **Figure 1**, to cut the sandpaper to the necessary shape.

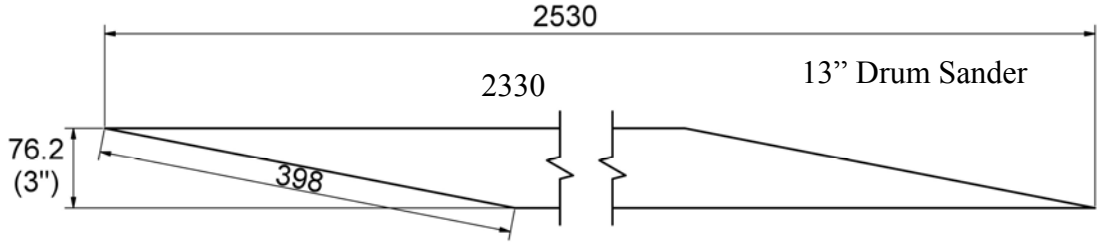

Figure 1

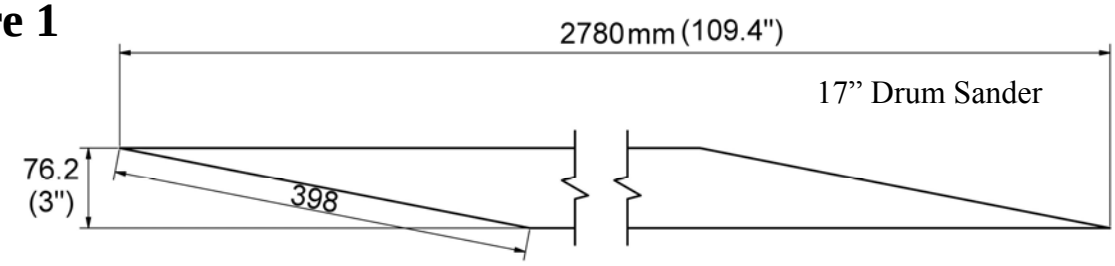

Wrap the sanding drum with the new sandpaper.Make sure to wrap the sandpaper tight and try to keep the gaps to a minimum.

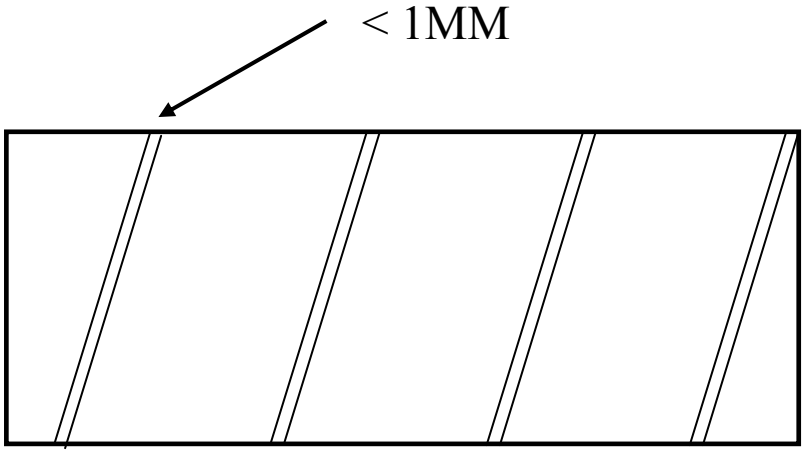

Spring Loaded Quick Release
Paper Mechanism

4.3 ADJUSTMENT

TENSION AND TRACKING

After reasonable usage of the drum sander, the conveyor may slightly stretch and will require to be tensioned. When tensioning the conveyor belt, it is important to do so from both sides and not to tension one side more than the other as this may lead to more tracking problems.

On the side of the conveyor you will find tensioning controls. (see below) Turn the conveyor adjustment knobs one full turn at a time until the conveyor belt no longer slips or is off during operation. If you notice that the conveyor is tracking to one side, turn the machine **OFF**, and follow the next few steps for proper tracking.

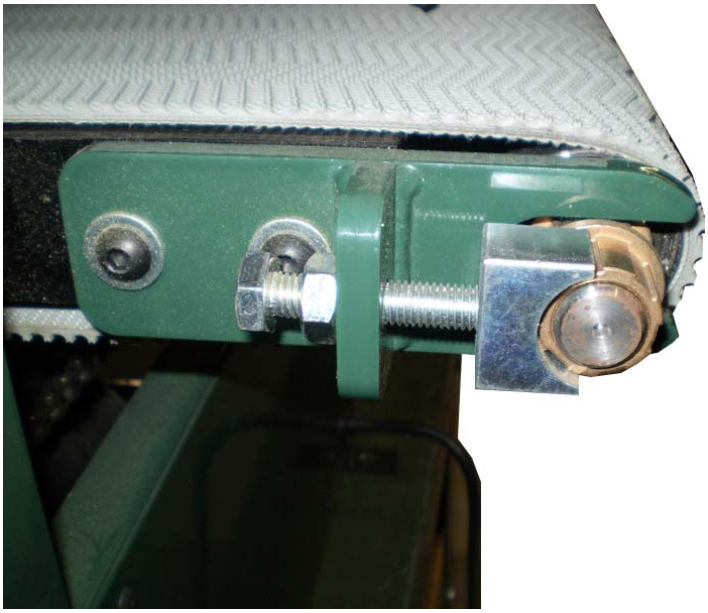

TRACKING

The conveyor must track straight for proper sanding. If the conveyor tracks to either side and not straight, you must fix the tracking. When tracking your conveyor, remember that this process can take some time and that proper balance and patience is required. To make the conveyor move in the middle of the rollers, it is recommended that you first over tighten the loose side (the side the belt is tracking towards) and then loosen that same side in order to make the conveyor stay in position. You can try this for both sides but must ensure that the conveyor tracks in the middle by trail and error.

1) Turn the conveyor belt **ON**. Watch the conveyor track and notice which way it is tracking.
2) Once you have determined which way it is tracking, turn the machine **OFF,** tension the tracking bolt on the loose side (the direction the belt is tracking to). Turn the machine **ON** to see if it is tracking the opposite way. (This may take some time to notice a difference but be patient)
3) When the conveyor is near the middle of the table, loosen the adjustment knobs until the conveyor itself stops moving sideways and tracks straight.
4) Repeat steps 2 & 3 if you do not get results right away. This process may take several minutes.

MAINTENANCE

Cleaning and maintaining this machine is relatively easy. It is imperative to vacuum or use an air blower to clean off wood dust from internal components from time to time to keep the machine clean. To clean your sandpaper from time to time to preserve the life, you can use a rubber abrasive cleaner and run it on the drum as it spins.

LUBRICATION

Lubrication of the chain mechanism is important and should be done periodically for proper maintenance.
Use a light machine oil. Do not use too much lubrication only a fair amount as too much will attract dirt and could cause the chain to malfunction as it may clog.
Refer to the diagram below and take note of the arrows designated for lubrication.

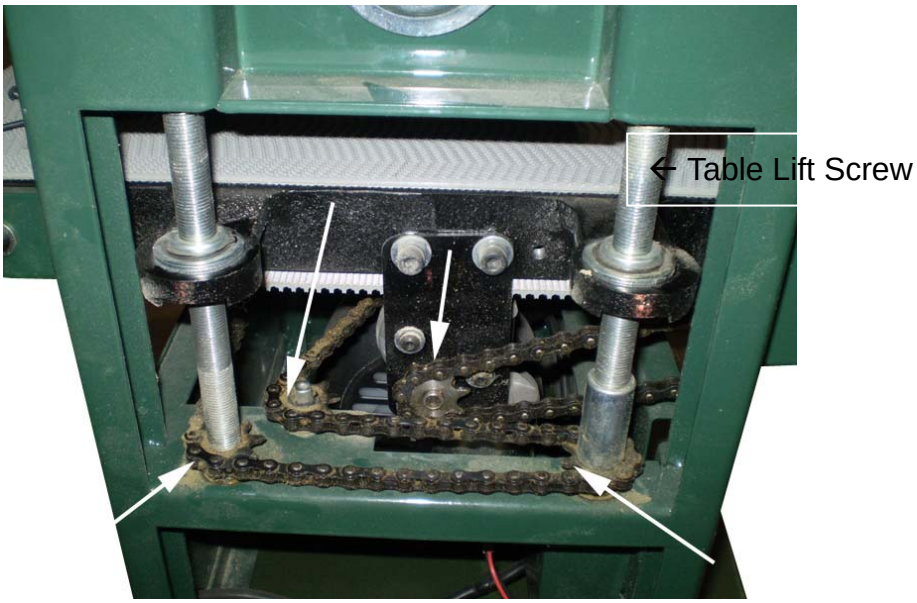

Every six months, the table lift screws will also need lubrication. (Shown in diagram ablove) It is best to clean the screws first before lubricating. Wipe off with a cleaning towel and then run on the lubrication in an even manner

THICKNESS SCALE CALIBRATION

After some time you may notice that the thickness scale can be a little off. In order to sand accurately you must make sure that the thickness scale is calibrated properly and this is an easy process to do every once in a while.

1) Sand a scrap work piece with the sander and measure the thickness of the finished piece.
2) Loosen the screw that secures the thickness scale pointer and adjust this to the measured work piece

Adjust the level of conveyor belt and sanding drum

The standard is distance A=B

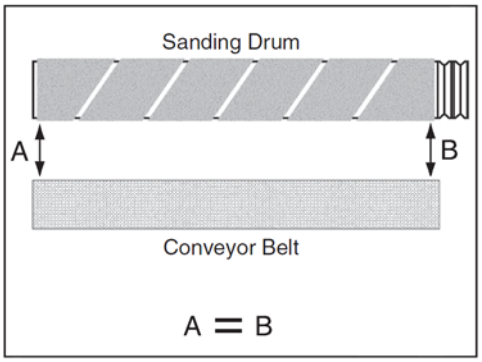

When the sanding drum titles left or right, please lose the 2 nuts (C) to adjust.

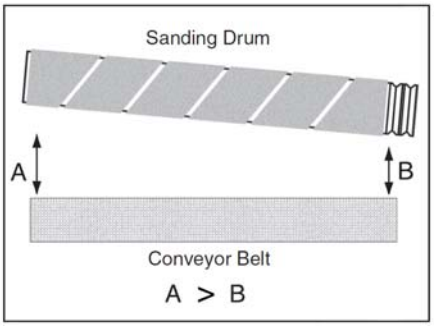

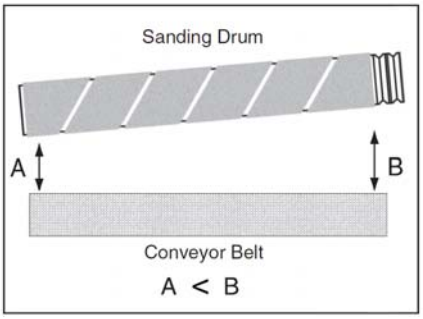

<u>Adjust steps:</u>

Right side is fixing end, please adjust left 2 bolts for level.

1. lose the 2 nuts to adjust the sanding drum

2. Insert the 2 level plates on the left and right side of the conveyor. (see fig.1)

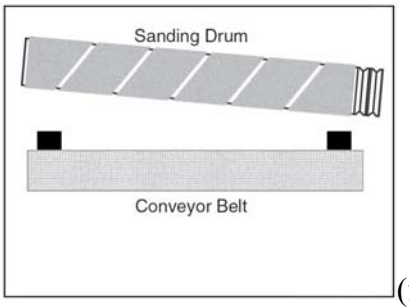

(fig.1)

3. Raising the table till the sanding drum touch the 2 level plates equally without any space in between. (see fig.2) then take out the 2 level plate and tight the 2 nuts again.

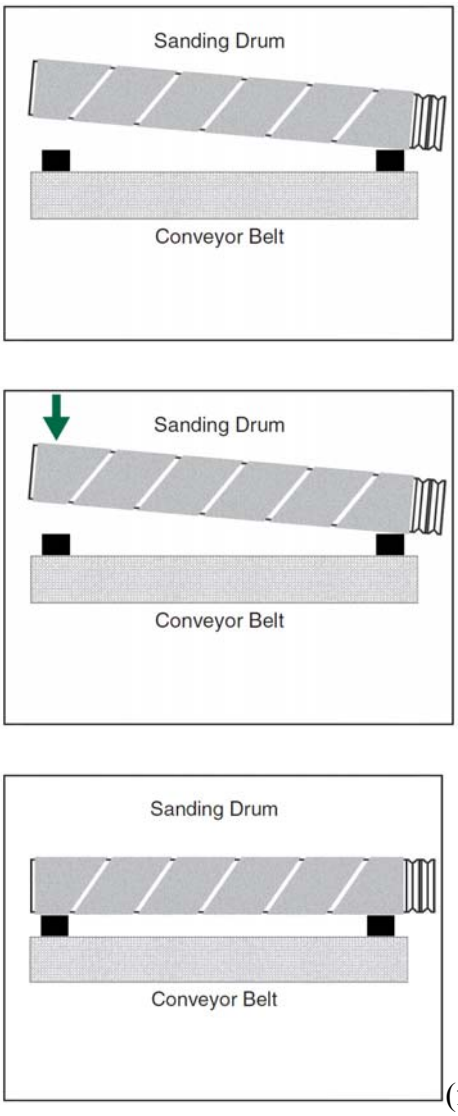

(fig.2)

5. MAINTEANCE

5.1 MAINTENANCE & TROUBLE SHOOTING

SYMPTOM	POSSIBLE CAUSE	POSSIBLE SOLUTION
Machine is vibrating too much or is too noisy	1. V Belts are worn or loose 2. Motor or other integral component is loose 3. Pulley is loose 4. Motor bearings are worn	1. Inspect the belts and replace with same size or re-tension 2. Inspect the nuts and bolts that secure the motor and replace if necessary. Also replace worn or stripped bolts. 3. Remove pulley, replace shaft, pulley & setscrew and re-align. 4. Check and replace if necessary
Motor Overheats or is too hot	1. Poor circulation of air through motor 2. Motor overload 3. Motor is on too long	1. Clean motor to provide normal air circulation 2. Reduce load on motor 3. Allow motor to cool off.

SYMPTOM	POSSIBLE CAUSE	POSSIBLE SOLUTION
Machine doesn't turn on or trips breaker when turned on	1. Capacitor is faulty 2. Centrifugal switch is faulty 3. Motor ON/OFF switch is faulty 4. Motor is faulty 5. Motor connection wired incorrectly	1. Test and replace capacitor if needed 2. Adjust or replace centrifugal switch 3. Replace ON/OFF switch if faulty 4. Test, replace or repair motor 5. Make sure motor is wired correctly
Conveyor Slips when sanding under load	1. Conveyor is too loose 2. Excessive Load	1. Tension the conveyor properly 2. Reduce the load
Conveyor tracks to one side only	1. Conveyor not tracking properly	1. Track the conveyor properly
Machine stalls or seems under powered	1. Low power supply voltage 2. Belt is slipping 3. Poor Dust Collection 4. Machine overload 5. Overheated Motor	1. Ensure that all lines and grounds are operations and have correct voltage 2. Replace belt and re-check 3. Check for air leaks seal leaks, eliminate bends in piping and ensure machine is getting proper suction from port 4. Use new sandpaper and ensure you are following max. guidelines 5. Allow motor to cool

SYMPTOM	PROSSIBLE CAUSE	POSSIBLE SOLUTION
Sandpaper tears off drum or wears excessively	1. Sand paper is not securely fastened to drum 2. Nail or metal piece in wood being sanded 3. Too much use without cleaning of paper	1. Re-check to ensure paper is fastened to drum using spring loaded release 2. Sand only clean pieces, or severe damage can be caused to machine 3. Use an abrasive
Poor Dust Collection	1. Dust collection line outs are undersized or not properly sized for this machine 2. Dust collector too small for this machine 3. Dust collector is too far away	1. Branch from 2 ½” (at source) out to a minimum of 4” to your collector. 6” or 8” is OK as well. Do not stay at a 2 ½” pipe size 2. Dust collector should be at least 750CFM capacity. If not, upgrade to a larger collector 3. Bring your collector closer as the farther away it is, the less air pressure there is. Should be at 10 feet max distance

6. ELECTRIC

6.1 SAFETY RULES FOR ELECTRICAL CONTROL SYSTEM

1. Only personnel who are properly trained and have adequate knowledge and skill should undertake all electrical/electronic troubleshooting and repair.
2. Do not alter or bypass protective interlocks.
3. Before starting, read and observe all warning labels.
4. When trouble shooting make sure the power source has been disconnected and main switch has been locked.
5. Take extra precautions in damp areas to protect you from accidental grounding.
6. Before applying power to any equipment it must be established, without a doubt, that all persons are clear.
7. Do not open the electrical control panel unless it is necessary to check the electrical equipment.
8. Do not alter the electrical circuits unless authorized to do so by the manufacturer.
9. When replacing electrical components, make sure they conform to the manufacturer's specifications, including proper colour coding.
10. Do not wear metal frame glasses, metallic necklaces or chains while working on any electrical equipment. Also do not wear any ring, watch or bracelet while operating electrical equipment.

7. Parts List & Diagrams

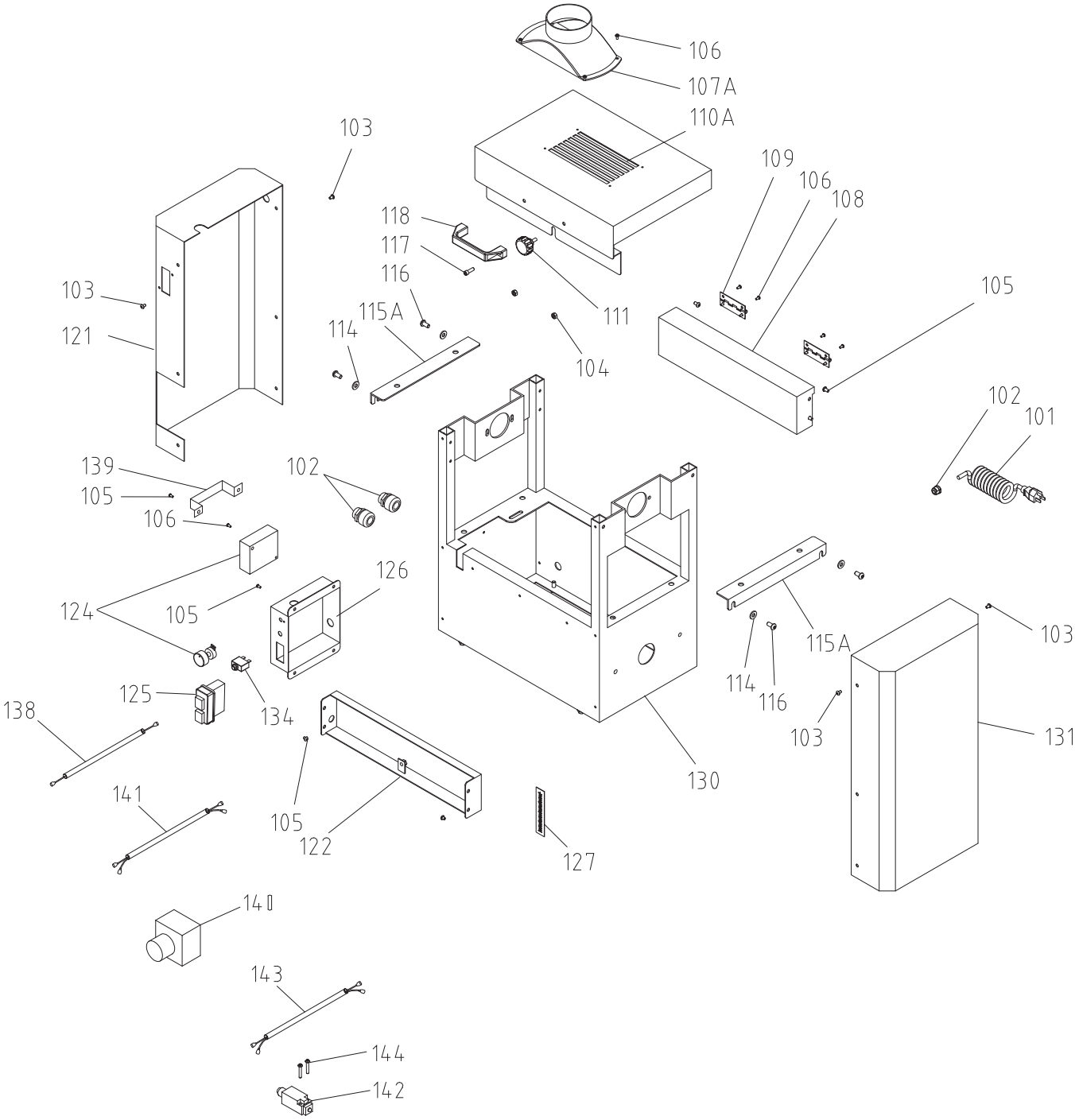

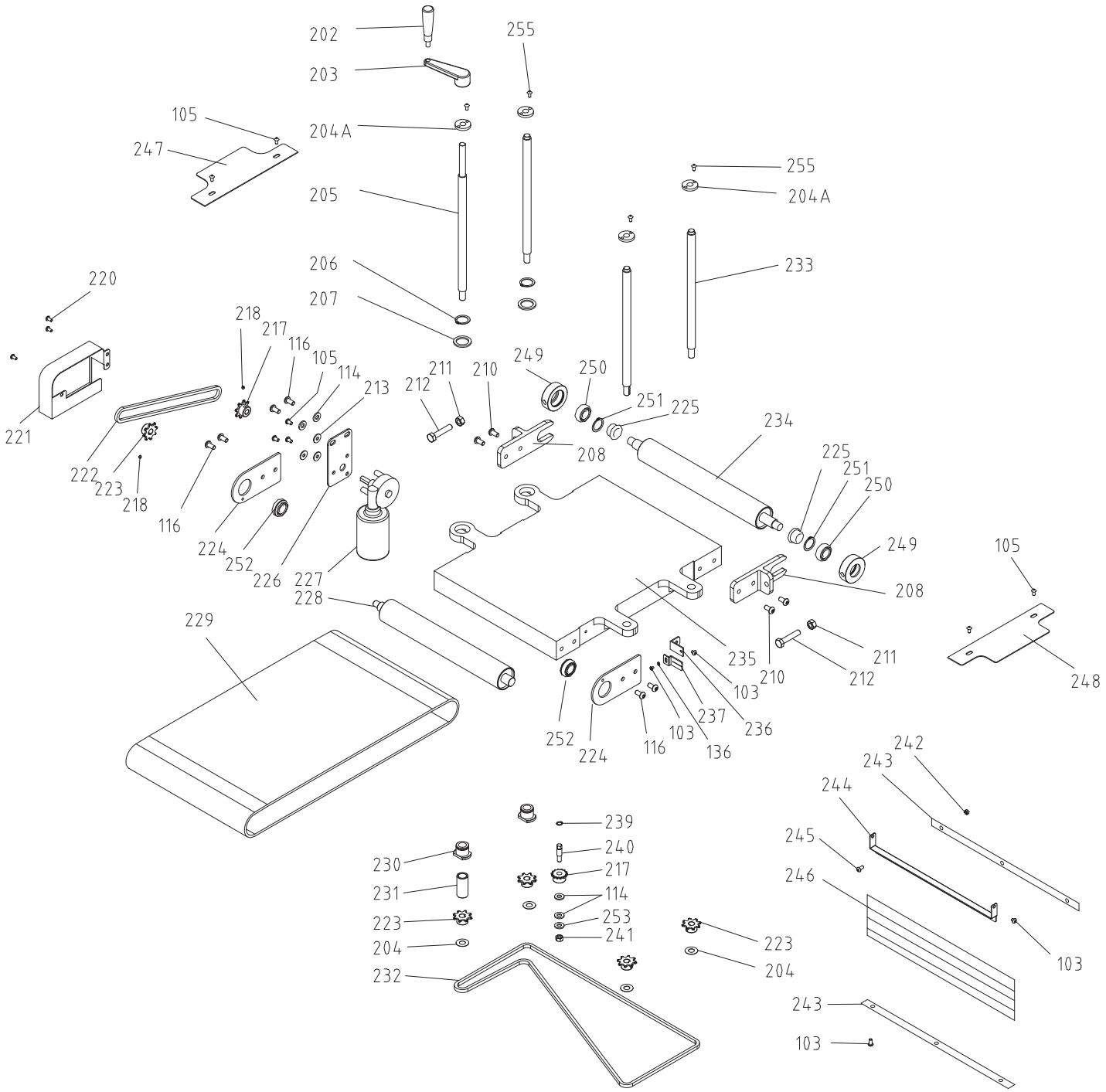
202
203
255
105
204A
247
205
255
204A
233
206
207
220
218
217
116
105
114
213
211
210
249
250
212
251
225
234
221
222
223
218
116
208
225
251
250
224
252
226
227
228
249
105
208
229
235
211
210
212
248
103
237
236
252
224
116
103
136
242
243
244
239
245
240
230
217
246
231
114
223
253
241
223
204
204
103
232
243
103

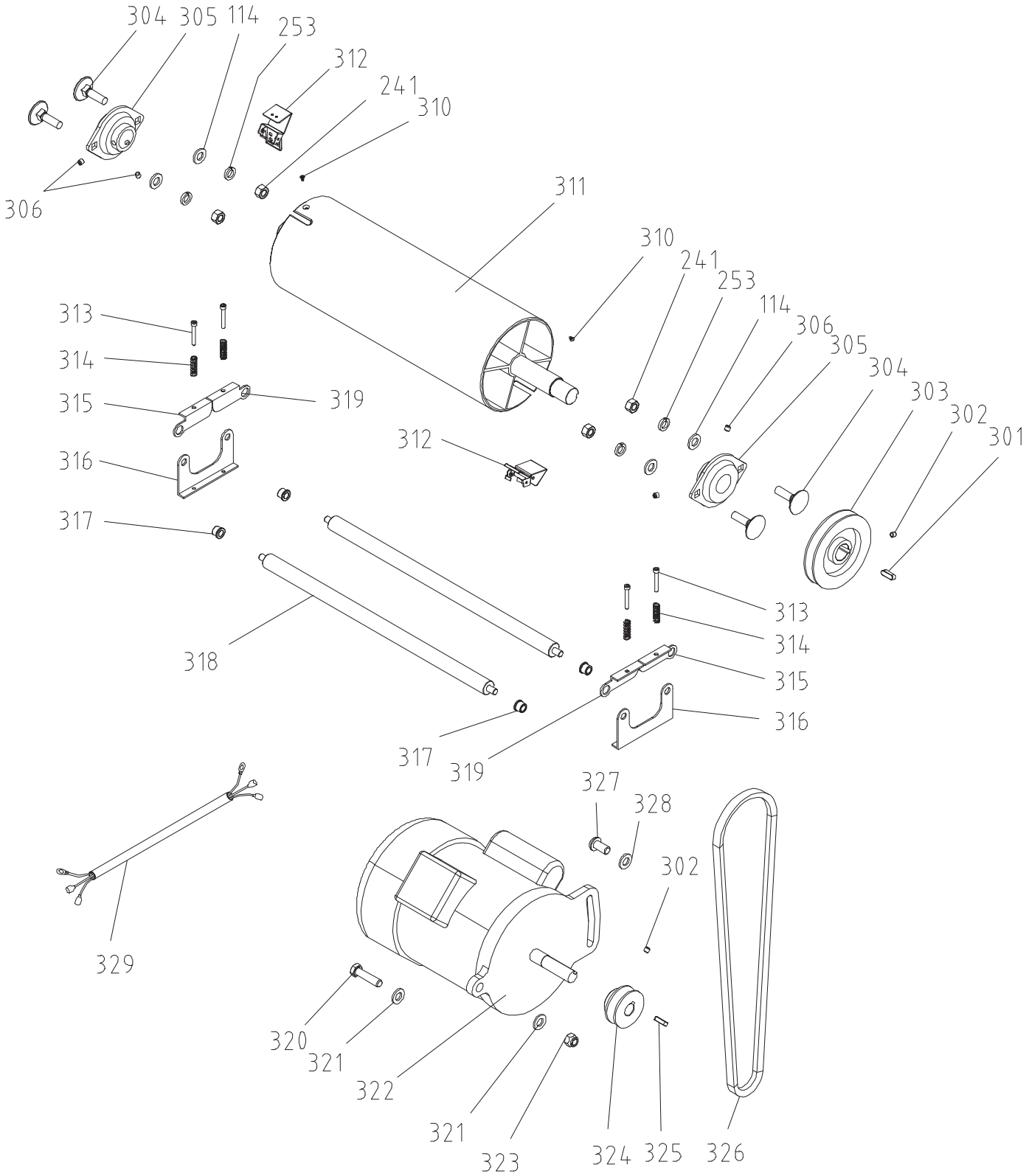
304
305
114
253
312
241
310
306
311
310
241
253
114
306
305
304
303
302
301
313
314
315
319
316
317
312
318
313
314
315
316
317
319
327
328
302
329
320
321
322
321
323
324
325
326

REF.	DESCRIPTION
101	CORD
102	CORD HOLDER
103	FLAT HEAD CAP SCREW
104	NYLON NUT 5/16"
105	FLAT HEAD CAP SCREW M6
106	FLAT HEAD CAP SCREW M4
107A	4" DUST PORT
108	REAR PANEL
109	HINGE
110A	TOP COVER
111	KNOB 5/16
114	FLAT WASHER
115A	BRACE
116	FLAT HEAD CAP SCREW M8
117	PHILLIPS HEAD SCREW 1/4"
118	HANDLE
121	LEFT COVER
122	FRONT PANEL
124	CIRCUIT CONTROL GROUP
125	SWITCH
126	SWITCH BOX
127	SCALE LABEL
130	BODY
131	RIGHT COVER
134	OVERLOAD TRIP 9A
138	WIRE
139	BOX HORDER
140	EMERGENCY SWITCH
141	CORD
142	LIMITED SWITCH
143	CORD
144	SOCKET HEAD CAP SCREW M4

REF.	DESCRIPTION
202	HANDLE
203	HANDLE BASE
204A	CU WHSHER
205	SCREW HEIGHT ADJUSTMENT(LONG)
206	EXTERNAL RETAINING RING S25
207	FLAT WASHER
208	ROLLER BRACKET
210	FLAT HEAD CAP SCREW M8
211	NUT M10
212	SCREW M10
213	FLAT WASHER 1/4
217	SPROCKET M10
218	SET SCREW M5
220	FLAT HEAD CAP SCREW M5
221	COVER
222	CONVEYOR MOTOR CHAIN
223	SPROCKET M12
224	ROLLER BRACKET (F)
225	BUSHING
226	MOTOR PLATE
227	GEARMOTOR
228	DRIVER ROLLER
229	CONVEYOR BELT
230	NUT
231	SHAFT
232	CHAIN
233	TABLE LIFT SCREW(S)
234	IDLER ROLLER
235	TABLE
236	POINTER BASE
237	POINTER
239	EXTERNAL RETAINING RING S10
240	SPROCKET SHAFT
241	HEX NUT 5/16"
242	HEX NUT 3/16"
243	IRON SHEETS
244	IRON SHEETS - U TYPE
245	PHILLIPS FLAT HEAD SCREW 3/16
246	RUBBER SHEET
247	PLATE FOR TABLE(BIG)
248	PLATE FOR TABLE(SMALL)
249	BEARING HOUSING
250	BEARING 6202ZZ
251	INTERNAL RETAINING RING R35
252	6202ZZNR BALL BEARING-SNAP RING
253	LOCK WAWHER 5/16"
255	FLAT HEAD CAP SCREW M4

REF.	DESCRIPTION
301	KEY 6
302	SET SCREW 1/4
303	SPINDLE PULLEY
304	CARRIAGE BOLT
305	BEARING ASSY INBOARD
306	SET SCREW M6
310	FLAT HEAD CAP SCREW M3
311	DRUM
312	BELT FASTER ASSY
313	SOCKET HEAD CAP SCREW M4
314	SPRING
315	BRACKET RIGHT ROLLER
316	BRACKET ROLLER SUPPORT
317	BUSHING
318	ROLLER PREESSURE
319	BRACKET LEFT ROLLER
320	HEX BOLT 3/8
321	FLAT WASHER 3/8"
322	MOTOR
323	LOCK NUT 3/8"
324	MOTOR PULLEY
325	KEY 5*5*25MM
326	BELT A38
327	HEX BOLT M10
328	FLAT WASHER
329	MOTOR CORD

Optional Accessories

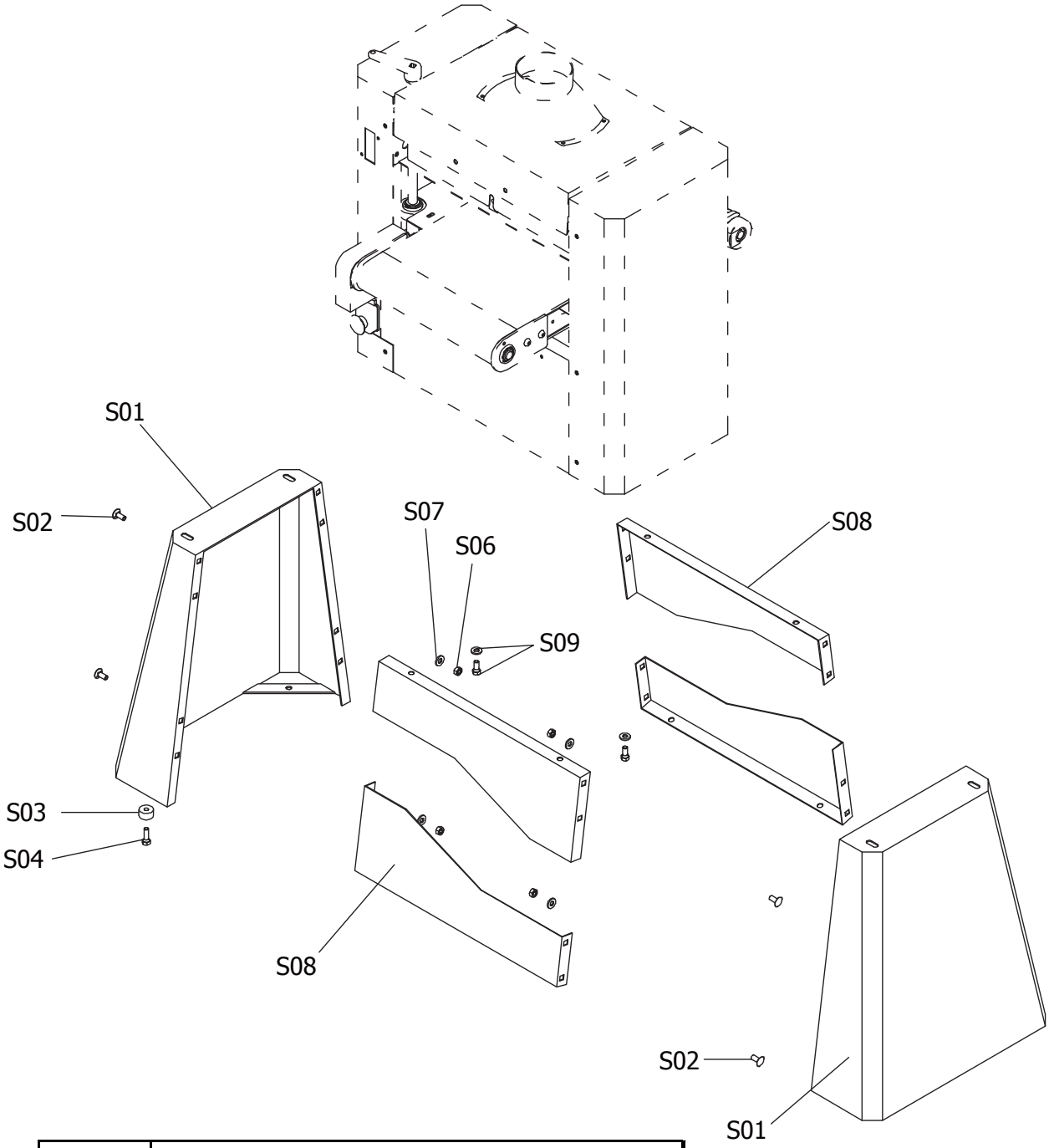

REF.	DESCRIPTION
S01	STAND BRACKET PLANE
S02	CARRIAGE BOLT
S03	RUBBER FEET
S04	HEX BOLT 5/16"
S06	HEX NUT 5/16"
S07	FLAT WASHER 5/16"
S08	STAND SIDE BRACKET
S09	HEX BOLT 5/16"

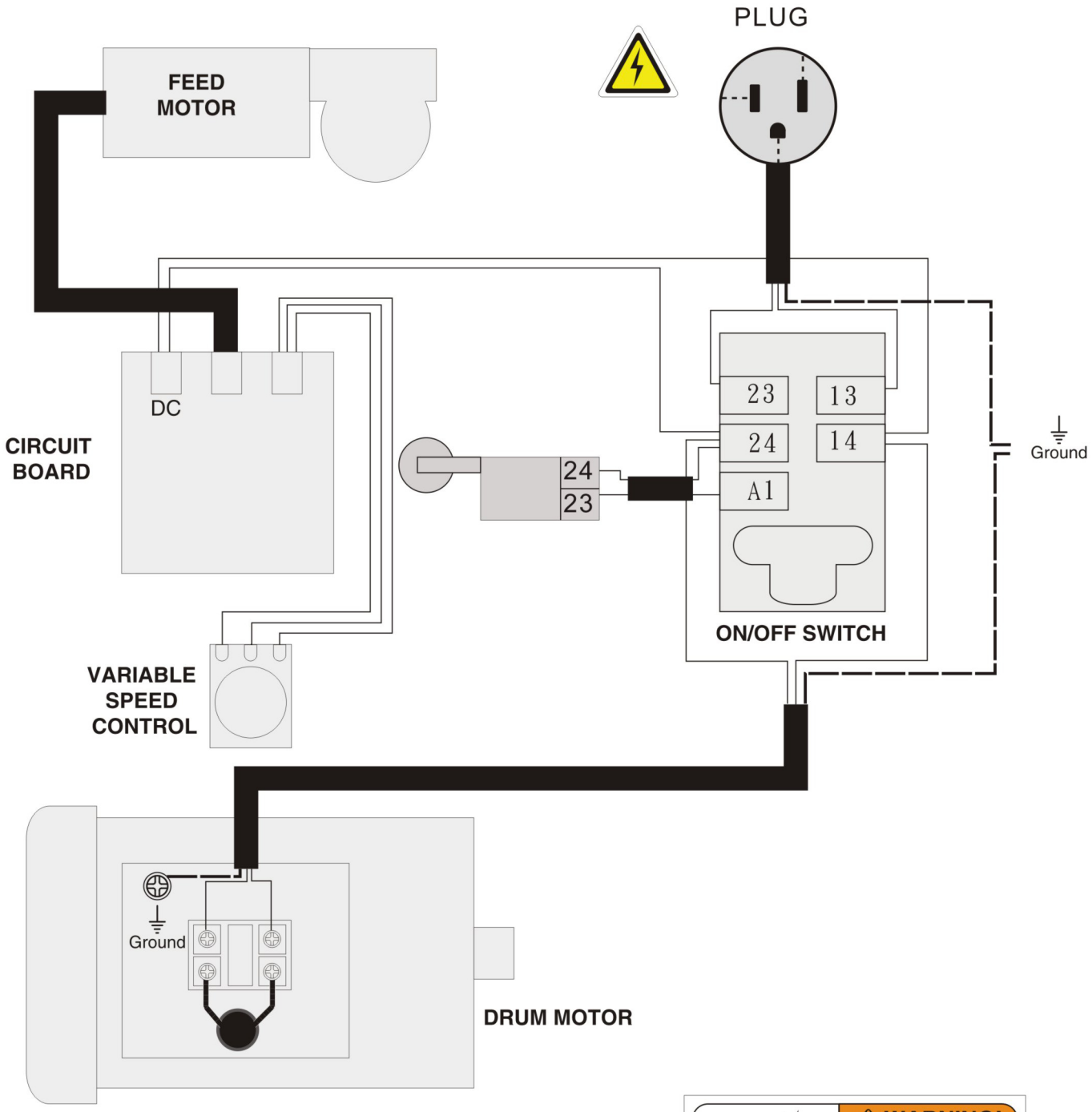

NOTICE

The motor wiring shown here is current at the time of printing, but it may not match your machine. Always use the wiring diagram inside the motor junction box.

The Axminster guarantee

Buy with confidence from Axminster!
So sure are we of the quality, we cover all parts and labour free of charge for three years!

For more information visit **axminstertools.com/3years**

The packaging is suitable for recycling.
Please dispose of it in a responsible manner.

EU Countries Only

Do not dispose of electric tools together with household waste material.
By law they must be collected and recycled separately.

Axminster Tools, Axminster Devon EX13 5PH
axminstertools.com