AXMINSTER PROFESSIONAL

Code 107660

Original Instructions

AP3327B

Bandsaw

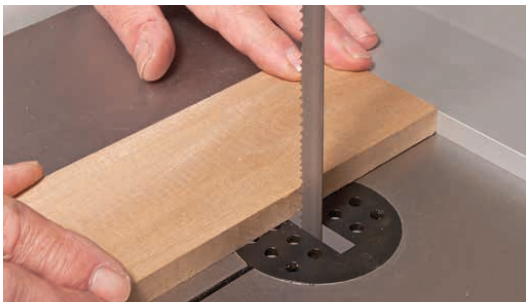

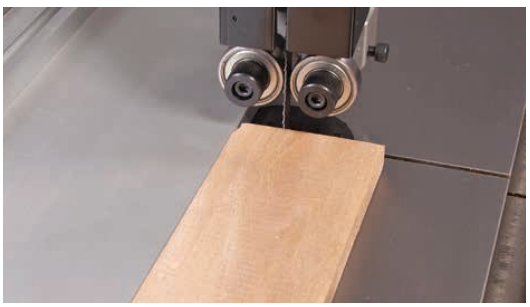

AXMINSTER THREE YEAR GUARANTEE

AT:28/03/2023
BOOK VERSION: 09

INDEX OF CONTENTS

What's Included	03-04-05
General Instructions for 230V	06
Specification	07
Main Assembly	07-08-09-10-11-12-13
Illustration and Parts Description	14-15-16-17-18-19
Setting Up the Saw	20-21-22-23
Operating Instructions	23-24
Changing the Saw Blade	24-25
Changing the Blade Speed	26
Maintenance	27
Exploded Diagrams/Lists	28-29-30-31-32-33-34
Wiring Diagram	35

Cert No: SBW-430

Axminster Tool Centre Ltd
Axminster Devon
EX13 5PH UK
axminstertools.com

declares that the machinery described:-

Type	**Bandsaw**
Model	**AP3327B**

Signed

Andrew Parkhouse
Operations Director Date: **26/04/2020**

EU Declaration of Conformity

This machine complies with the following directives:

2006/42/EC
06/42/EC - Annex I/05.2006
EN 1807-1:2013

conforms to the machinery example for which the
EC Type-Examination Certificate No BM 50309398
has been issued by **OAV Equipment & Tools, Inc.**
at: No. 96, Wucuo 1st st., 43641 Qingshui Dist., Taichung City Taiwan

and complies with the relevant essential health and safety requirements.

The symbols below advise the correct safety procedures when using this machine.

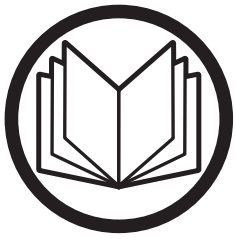

Fully read manual and safety instructions before use

Ear protection should be worn

Eye protection should be worn

Dust mask should be worn

HAZARD

Quantity	Item		Model Number AP3327B
1	Bandsaw		
	Bandsaw Blade 3,327mm (131") long, mounted on saw but not tensioned.		
1	Cast Iron Table	**1**	

Fence Assembly Comprising:			Table Extension Comprising:		
1	Front Fence Rail with Scale	**2**	1	Extension Table	**15**
1	Rear Fence Guide Rail	**3**	3	M8 x 20mm Bolts	**16**
1	Fence	**4**	3	M8 Washers	**17**
1	Fence Clamp Assembly with		3	M8 Spring Washers	**18**
	Magnifying Glass	**5**	1	Mitre Fence	**19**
1	M8 Lift and Shift Handle	**6**	1	Blade Guide Operating Wheel	**20**
1	M8 Threaded Lever	**7**	1	Table Alignment Pin	**21**
1	Threaded 'T' Slot Insert	**8**	1	10-13mm Spanner	**22**
2	M6 x 20mm Threaded Bolts	**9**	1	5-8mm Hex Keys	**23**
2	M6 x 16mm Caphead Bolts	**10**	4	M8 x 16mm Threaded Bolts	**24**
1	M8 Large Washer	**11**	1	M8 x 90mm Threaded Bolt/Nut	**25**
2	M6 Small Washers	**12**	4	M8 Washers	**26**
2	Spring Washers	**13**	4	M8 Spring washers	**27**
1	M8 Nut	**14**			

1	Mitre Fence (Parts)	**19**
	a) Threaded lever with washer	e) Threaded 'T' bolts with Clamping Knobs
	b) Two Grub screws	f) Aluminium Fence
	c) Two Hex Keys 3-4mm	g) Depth Stop Assembly
	d) Mitre Fence Body	

Please read the Instruction Manual prior to using your new machine; as well as the operating procedures for your new machine, there are numerous hints and tips to help you to use the machine safely and to maintain its efficiency and prolong its life. Keep this Instruction Manual readily accessible for any others who may also be required to use the machine.

HAVING UNPACKED YOUR ACCESSORIES PLEASE DISPOSE OF ANY UNWANTED PACKAGING PROPERLY. THE POLYTHENE AND CARD ARE RECYCLABLE.

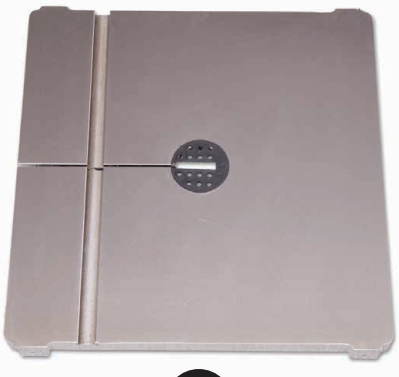

1

WHAT'S INCLUDED

2

3

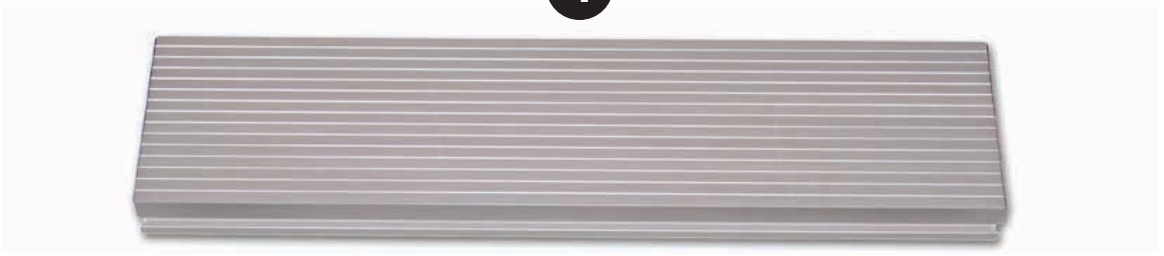

4

5

6 7 8

9 10 14

13 12 11

15
18
17
16

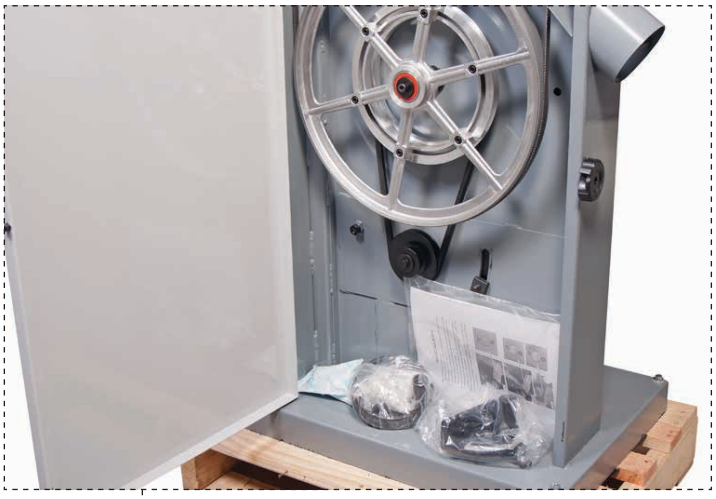

19
a
b
c
d
e
f
g

22
21
23
26
20
27
25
24

GENERAL INSTRUCTIONS FOR 230V MACHINES

The following will enable you to observe good working practices, keep yourself and fellow workers safe and maintain your tools and equipment in good working order.

WARNING!! KEEP TOOLS AND EQUIPMENT OUT OF REACH OF YOUNG CHILDREN

KEEP WORK AREA AS UNCLUTTERED AS IS PRACTICAL. UNDER NO CIRCUMSTANCES SHOULD CHILDREN BE ALLOWED IN WORK AREAS.

Mains Powered Tools

- Tools are supplied with an attached 16 Amp plug.
- Inspect the cable and plug to ensuree that neither are damaged. Repair if necessary by a suitably qualified person.
- Do not use when or where it is liable to get wet.

Workplace

- Do not use 230V a.c. powered tools anywhere within a site area that is flooded.
- Keep machine clean.
- Leave machine unplugged until work is about to commence.
- Always disconnect by pulling on the plug body and not the cable.
- Carry out a final check e.g. check the cutting tool is securely tightened in the machine and the correct speed and function set.
- Ensure you are comfortable before you start work, balanced, not reaching etc.
- Wear appropriate safety clothing, goggles, gloves, masks etc. Wear ear defenders at all times.
- If you have long hair wear a hair net or helmet to prevent it being caught up in the rotating parts of the machine.
- Consideration should be given to the removal of rings and wristwatches.
- Consideration should also be given to non-slip footwear etc.
- If another person is to use the machine, ensure they are suitably qualified to use it.
- Do not use the machine if you are tired or distracted
- Do not use this machine within the designated safety areas of flammable liquid stores or in areas where there may be volatile gases.
- Check cutters are correct type and size, are undamaged and are kept clean and sharp, this will maintain their operating performance and lessen the loading on the machine.
- **OBSERVE….** make sure you know what is happening around you and **USE YOUR COMMON SENSE.**

SPECIFICATION

Code	107660
Model	AP3327B
Rating	Trade/Professional
Power	1.5 kW 230V 16A
Blade Speed	390 & 840 m/min
Blade Length	3,327 mm(131″)
Blade Width Min/Max	3 mm(1/8″) 25 mm(1″)
Max Width of Cut	410 mm
Max Depth of Cut	300 mm
Max Width of Cut with Fence	370 mm
Table Size	600 x 445 mm
Table Tilt	-5° to +45°
Table Height	950 mm
Wheel Diameter	430 mm
Dust Extraction Outlet	100 mm
Overall L x W x H	820 x 670 x 1,880 mm
Weight	127 kg

MAIN ASSEMBLY

Your bandsaw is 95% assembled in order to reduce the footprint of the machine for packaging, several items are dismounted from the machine and need to be re-affixed.

WARNING!! BE VERY CAREFUL THERE ARE LOOSE ITEMS WITHIN THE CRATE ,REMOVE THE OUTER PACKAGING WITH CARE TO PREVENT DAMAGE!

HAVING UNPACKED YOUR ACCESSORIES PLEASE DISPOSE OF ANY UNWANTED PACKAGING PROPERLY. THE WOODEN PACKAGING IS BIODEGRADABLE.

WARNING! THE BANDSAW IS A HEAVY PIECE OF MACHINERY, WE STRONGLY ADVISE YOU GET THE ASSISTANCE OF ANOTHER PERSON OR USE SOME SORT OF LIFTING DEVICE, (HOIST, ENGINE CRANE), BEFORE YOU ATTEMPT TO LIFT OR MOVE THIS MACHINE!

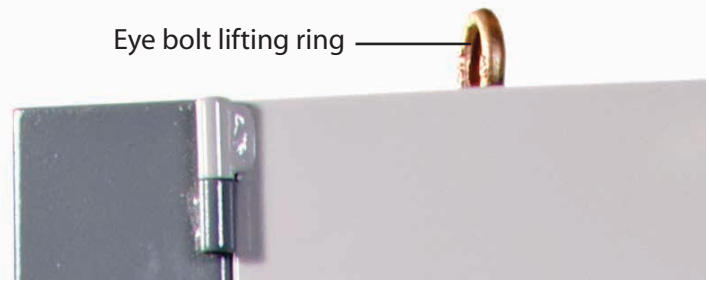

Lift the bandsaw off the pallet and place on a flat surface ascertain the orientation of the machine and move it to its desired position in the workshop. Ensure that the machine is positioned to allow sufficient clearance all round to cater for the maximum length of timber you wish to cut.

Mounting the Table

The saw table can be fitted without removing the blade. However, if you would feel more comfortable not having to manoeuvre the table around the blade (the table is quite heavy), remove the blade by opening the top and bottom covers, release the tension on the blade by releasing the Quick release tensioning lever (A), see fig 01-02.

Fig 01-02

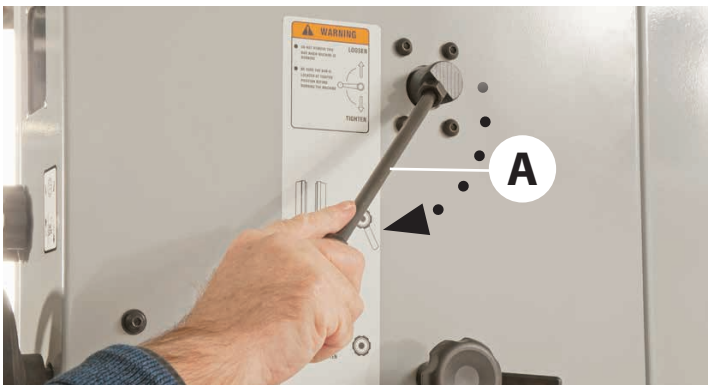

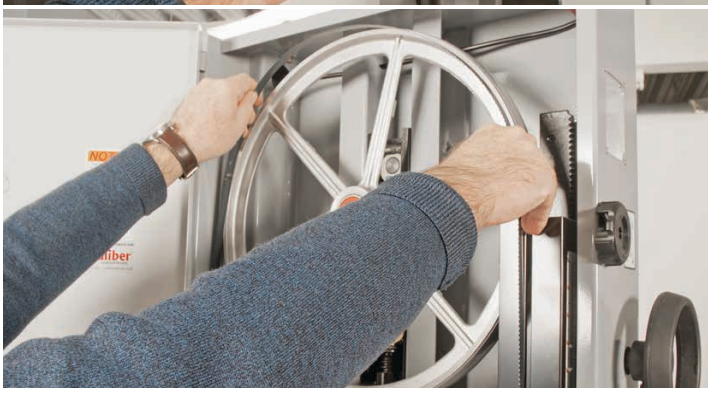

Continues Over....

Locate the cast iron table (1), table alignment pin (21), the four M8 x16mm bolts (24), M8x90mm bolt and nut (25), M8 washers and spring washers (26-27).

Step 1 Locate the threaded bolt/nut (25), screw the nut onto the thread then screw the bolt into the pre-drilled hole in the bandsaw frame behind the tilt quadrant, see fig 03.

Fig 03

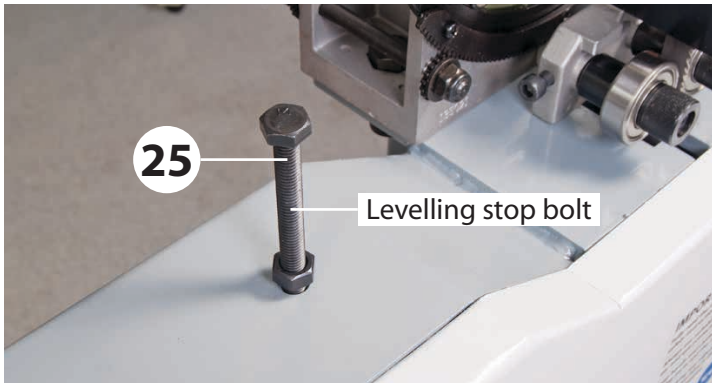

Step 2 Remove the table insert and place safely aside, see fig 04, lift the table (1), slide the blade through the table slot, see fig 05, lower the table on to the tilt quadrant assembly and line up threaded holes with the pre-drilled holes in the tilt quadrant, see fig 06. Place a spring/washer (26-27) over each M8 threaded bolt (24), see fig 07-08 and secure the table in position using the supplied spanner (22), see fig 09.

Fig 04

Fig 05

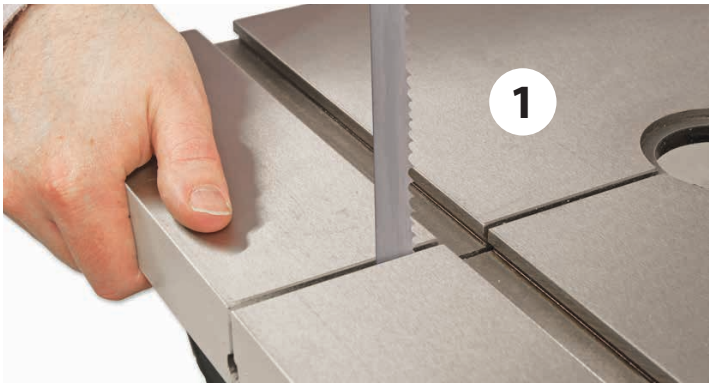

Fig 06

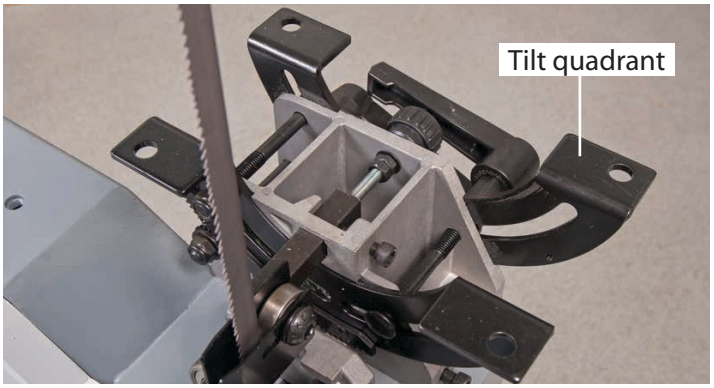

Fig 07-08-09

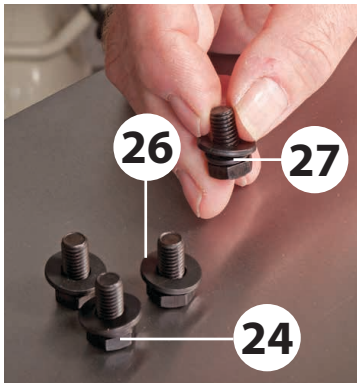

Step 3 Place a 90˚ square up against the blade and adjust the table levelling stop bolt (25) beneath the table until the table is perpendicular to the blade. Nip tighten the nut on the stop to lock the setting, see figs 10-11-12.

Fig 10-11

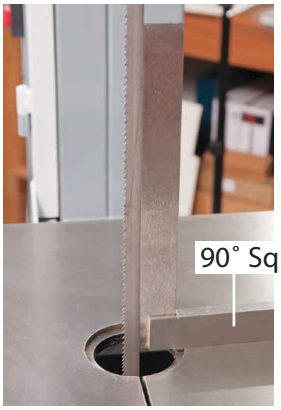

Fig 12

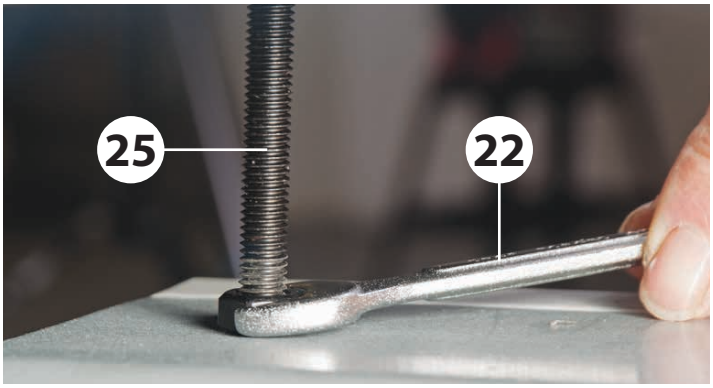

Step 4 Locate the table alignment pin (21), place a straight edge or 90˚ square across the table's slot and introduce the tapered alignment pin into the tapered hole to the front of the table, this will align both sides of the table, see figs 13-14.

Fig 13-14

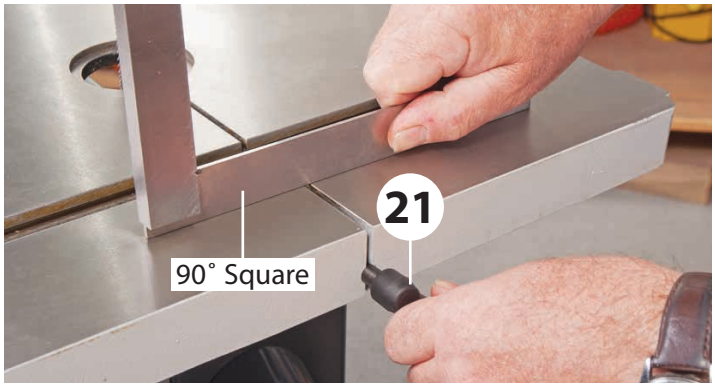

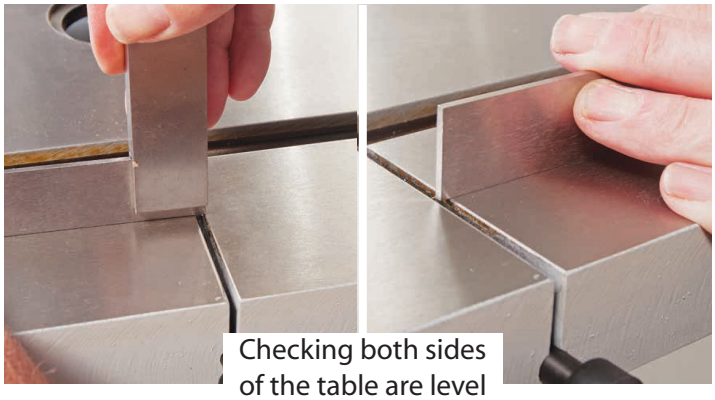

Checking both sides of the table are level

Table Extension

Step 1 Locate the table extension (15), M8x20 bolts (16) and M8 spring/washers (17-18), see fig 15. Place a washer and spring washer over each bolt, line up the holes in the extension table (15) with the threaded holes to the rear of the cast iron table (1) and lightly secure in place with the three M8 bolts (16), using the supplied spanner (22), see figs 15-16.

Fig 15-16

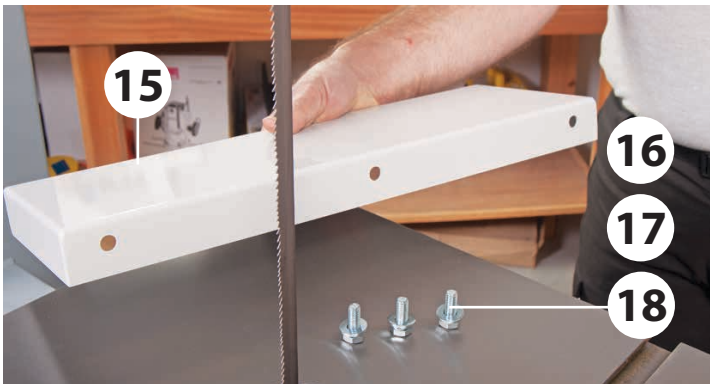

Step 2 Place a straight edge or 90˚ square across both tables until they are in line then tighten the three bolts, see figs 17-18.

Fig 17-18

Continues Over....

Step 3 Replace the table insert by lining up the two pins in the insert with the machined holes in the recess to the centre of the cast iron table. Push firmly down, see figs 19-20.

Fig 19-20

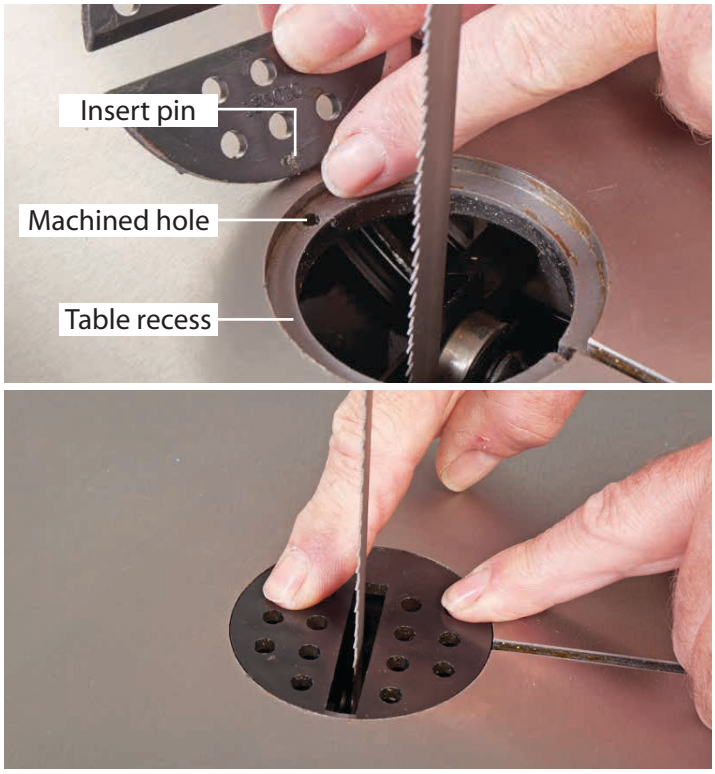

Fence Assembly

Locate the front fence rail with scale (2), rear fence guide rail (3), fence (4), fence clamp assembly (5), M8 lift & shift handle (6), M8 threaded lever (7), threaded 'T' slot insert (8), M6x20mm bolts (9), M6x16mm bolts (10), M8 large washer (11), M6 small washers (12), spring washers (13) and M8 nut (14).

Step 1 Place a washer (12) over each M6x20mm bolt (9), line up the elongated holes in the front fence rail (2) with the pre-drilled holes to the front of the cast iron table (1), introduce the two M6x20mm bolts (9) through the fence rail and lightly tighten using the supplied spanner (22), see figs 21-22-23-24.

Fig 21-22-23-24

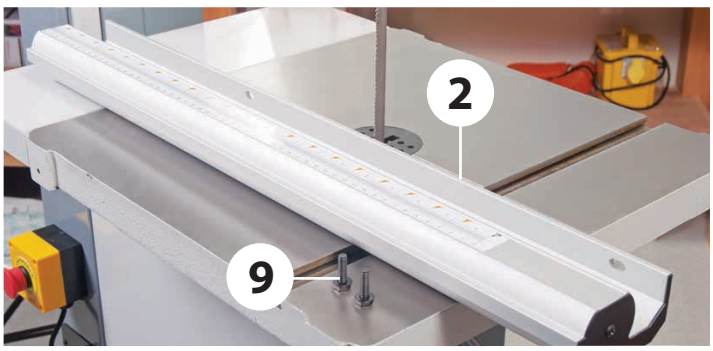

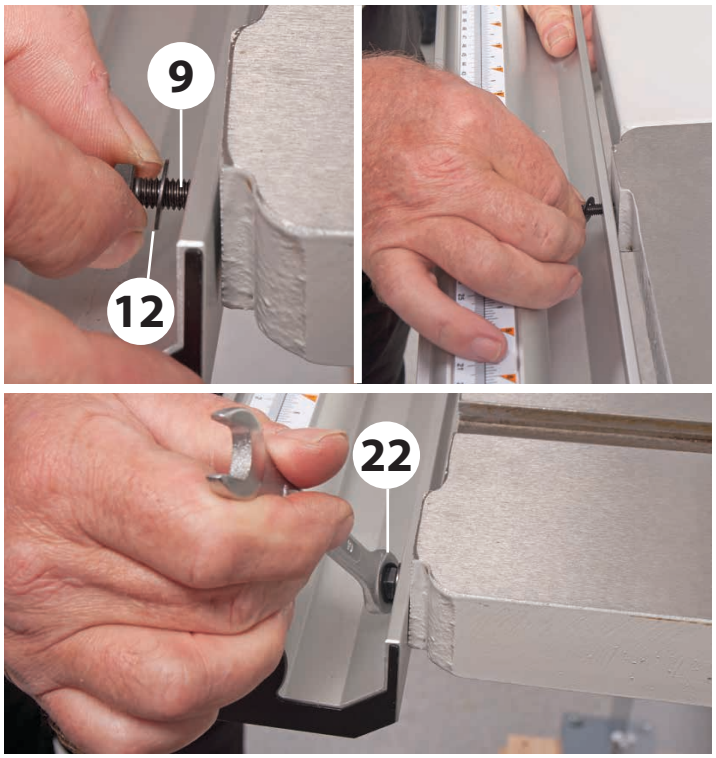

Step 2 Place a spring washer (13) over each M6 caphead screw (10), line up the holes in the rear fence guide rail (3) with the threaded holes to the opposite side of the cast iron table and secure in place with the two M6 caphead screws (10) and 5mm Hex key (23), see figs 25-26-27-28.

Fig 25-26-27

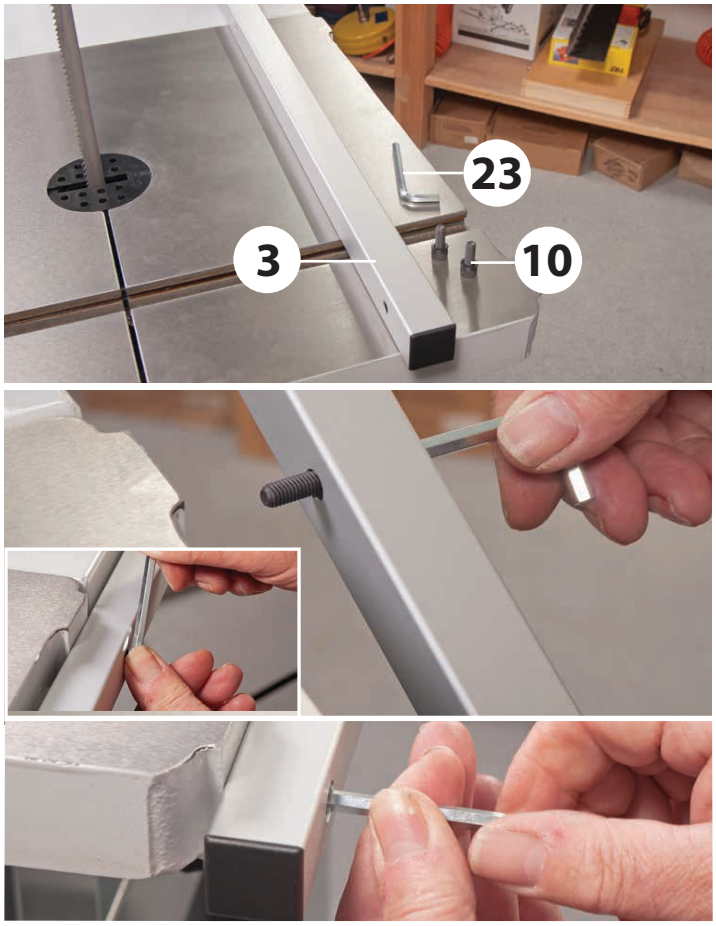

Step 3 Fit the fence clamp assembly (5) over the front fence rail (2) and lower the rear of the clamp assembly so the adjustable guide rests on top of the rear guide rail (3), see fig 28-29.

Fig 28-29

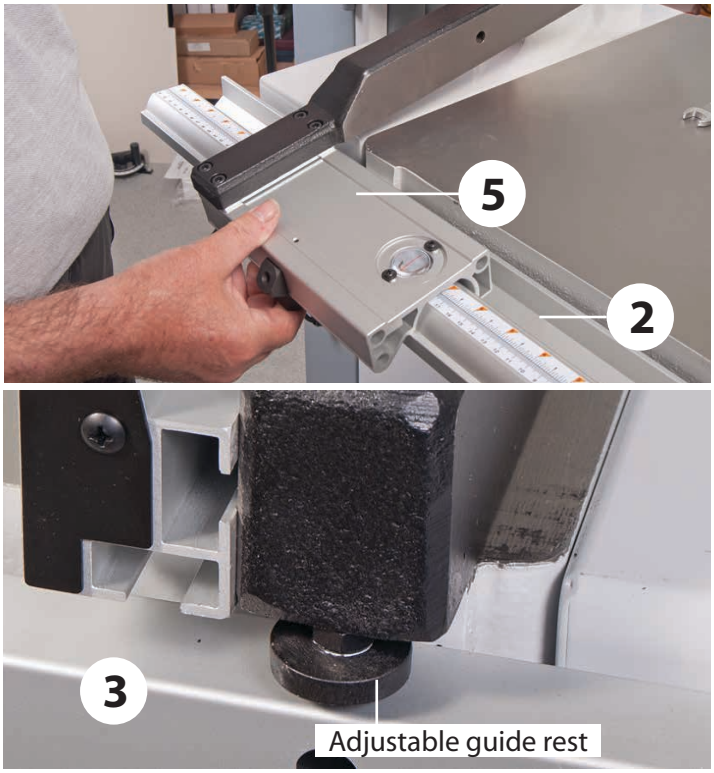

Step 4 Locate the M8 nut (14), and screw it onto the thread of the M8 threaded lever (7) then screw the threaded lever (7) into the threaded hole in the clamp assembly (5) mechanism and tighten the nut with the supplied spanner (22), see figs 30-31.

Fig 30-31

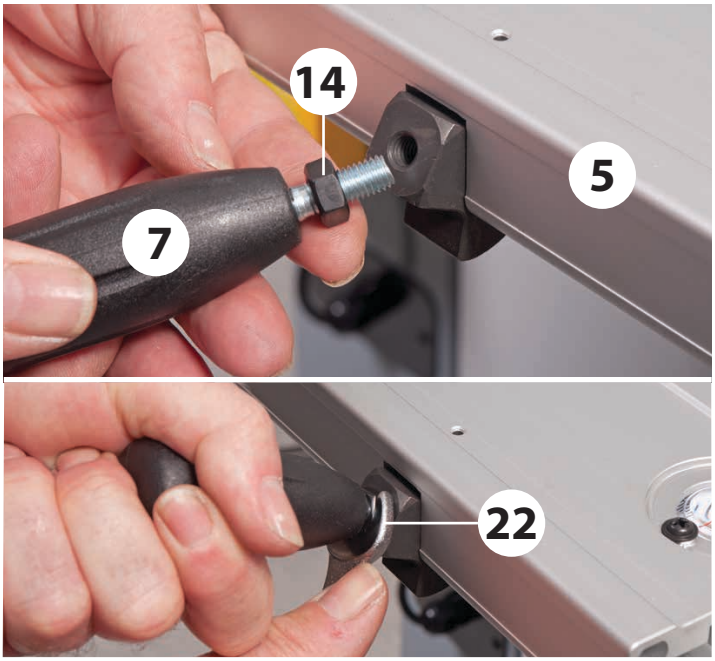

Step 5 Locate the fence (4), M8 lift and shift handle (6), M8 large washer (11) and threaded 'T' slot insert (8), see fig 32. Place the large washer over the thread of the lift and shift handle (6), see fig 33, introduce the handle through the machined hole to the side of the cast iron fence (5) and lightly screw on the threaded 'T' slot insert (8), see fig 34.

Fig 32

Fig 33-34

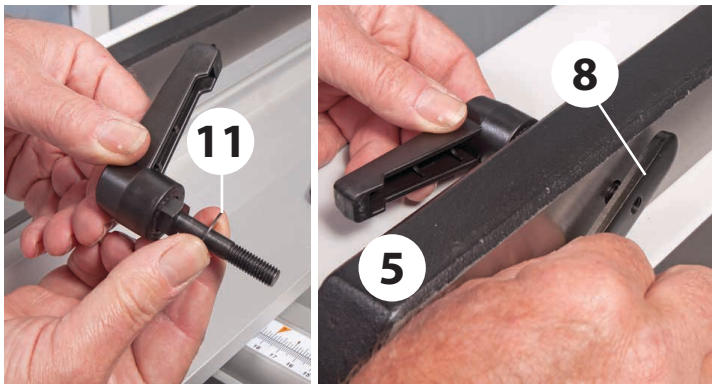

Step 6 Introduce the 'T' slot to the side of the fence (4) over the threaded 'T' slot insert (8) and slide on the fence until the fence (4) is flush with the end of the cast iron fence (5). Tighten the lift and shift handle (6), see figs 35-36-37.

Fig 35-36-37

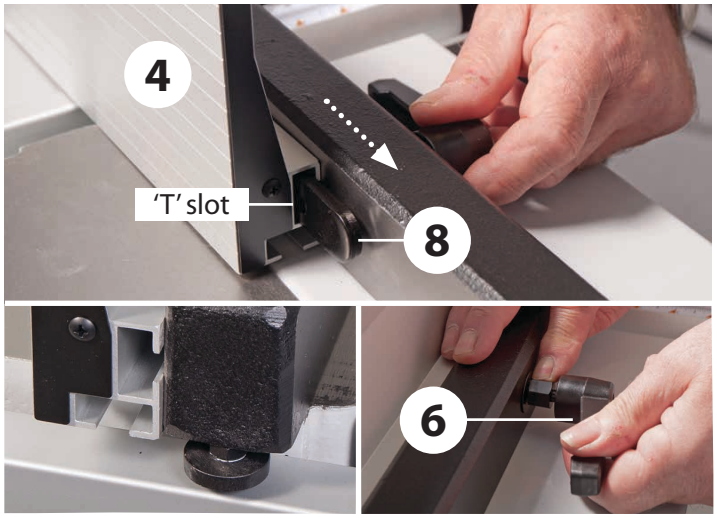

Continues Over....

Step 7 Slide the fence assembly (5) until its up against the blade and press down the locking lever (7), see fig 38. Look at the magnifying glass to check it's set to '0' on the scale, see fig 39. If it's out of alignment, loosen the front fence rail (2) and tap the side of the fence until the scale reads '0' then re secure the fence rail, see figs 40-41.

Fig 38

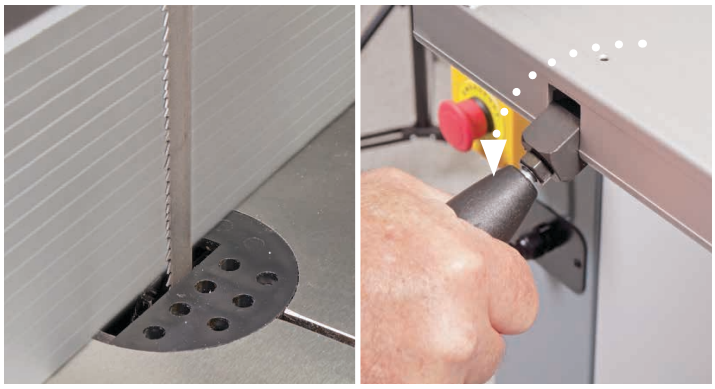

Fig 39-40-41

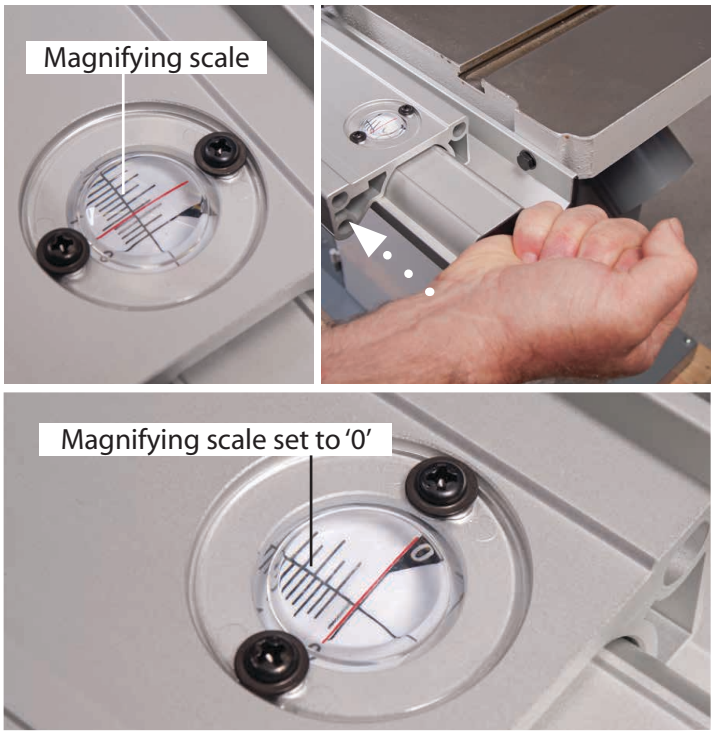

NOTE: The fence (4) has two positions, vertical and horizontal for cutting narrow pieces, see figs 42-43-44.

Fig 42-43-44

Mitre Fence Assembly

Step 1 Locate the following parts (see page 3) Threaded lever with washer (a), Grub screws (b), Hex keys (c), Mitre fence body (d), Threaded bolts with clamping knobs (e), Aluminium fence (f) and Depth stop (g).

Fig 45a

Fig 45b

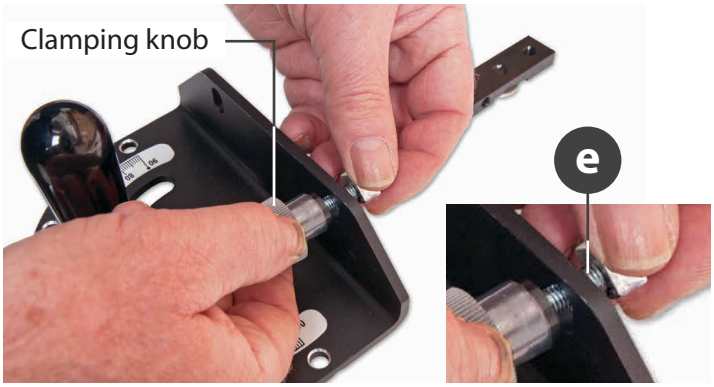

Step 2 Screw the lever (a) through the elongated machined cutout in the mitre fence body (d) and into the threaded hole in the square steel bar. Lightly tighten, see fig 45a.

Step 3 Remove the square nuts from the threaded bolt knobs (e). Insert the bolts through the two pre-drilled holes in the mitre fence mounting bracket and replace the square nuts, see fig 45b. NOTE: Give adequate clearance on the threads for the next step.

Step 4 Introduce the 'T' slot to the side of the fence (f) over the square nuts (e), lightly tighten clamping knobs to secure the fence (f) in position, see fig 45c.

Fig 45c

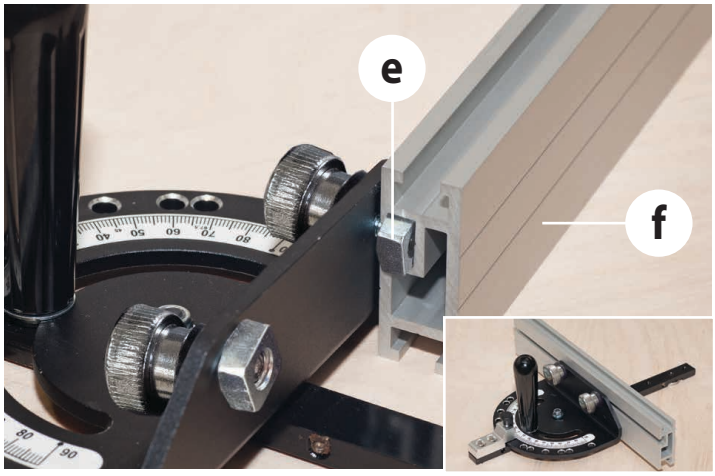

NOTE: Make sure the fence is in the correct way round, the base of the fence should be flush with the cast iron table (1).

Step 5 Locate the depth stop assembly (g), loosen the butterfly clamping knob on top of the unit. Line up the threaded 'T' bolt with the 'T' slot to the top of the aluminium fence (f) and slide it on. Light tighten the butterfly knob to secure the unit in position, see fig 45d.

Fig 45d

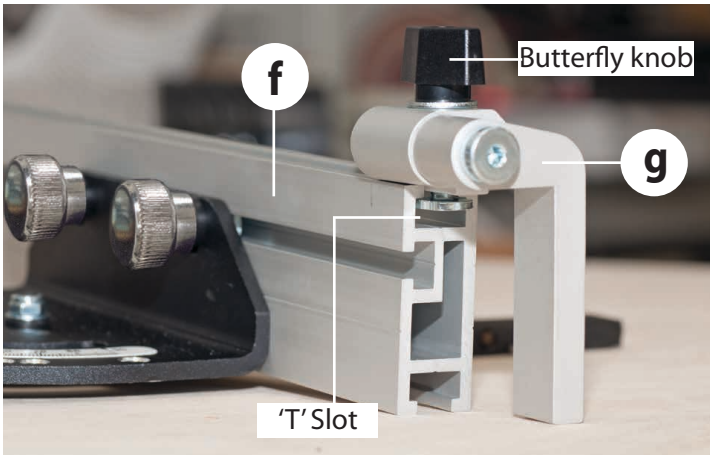

Step 6 Using the supplied Hex key (c) screw the two grub screws (b) into threaded holes to the end of the steel bar, see fig 45e. The grub screws can be adjusted so the mitre fence runs smoothly in the bandsaw tables 'T' Slot.

Fig 45e

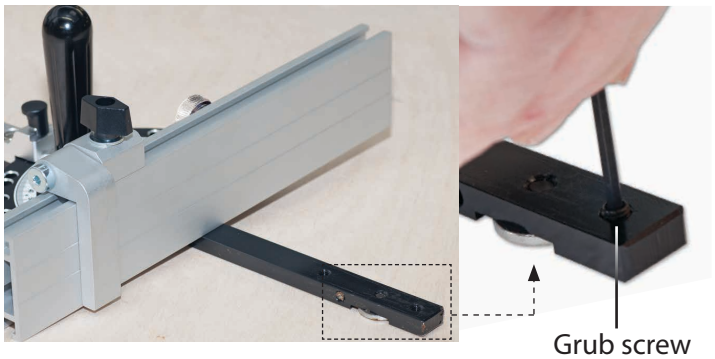

Step 7 Slide the mitre fence assembly into the cast iron table's 'T' slot, adjust the aluminium fence (f) so it just misses the saw blade, see fig 45f.

Fig 45f

Blade Guide & Guard Height Operating Wheel

Locate the operating wheel (20) and 5mm Hex key (23). Loosen the caphead screw on the hand wheel and slide it onto the shaft. Re-tighten the caphead screw, see figs 46-47.

Fig 46-47

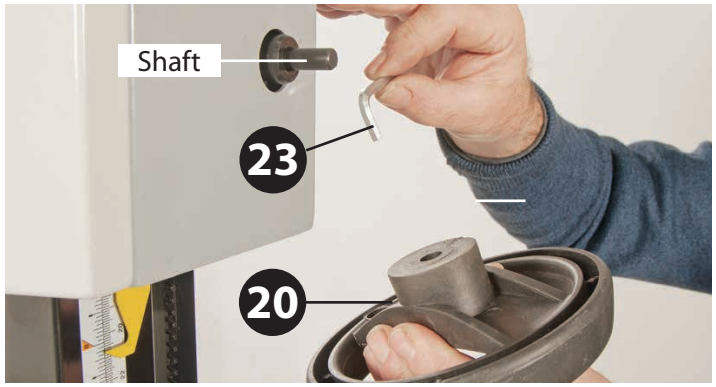

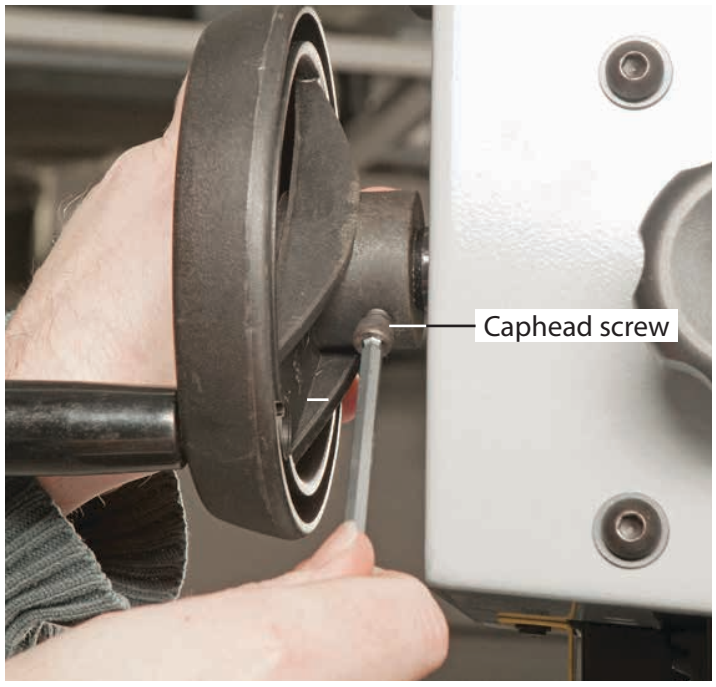

ILLUSTRATION AND PARTS DESCRIPTION

Emergency stop, press to instantly stop the bandsaw

On/Off button

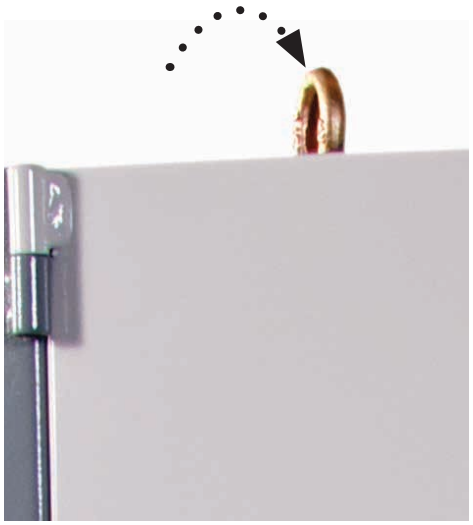

Eye bolt lifting ring

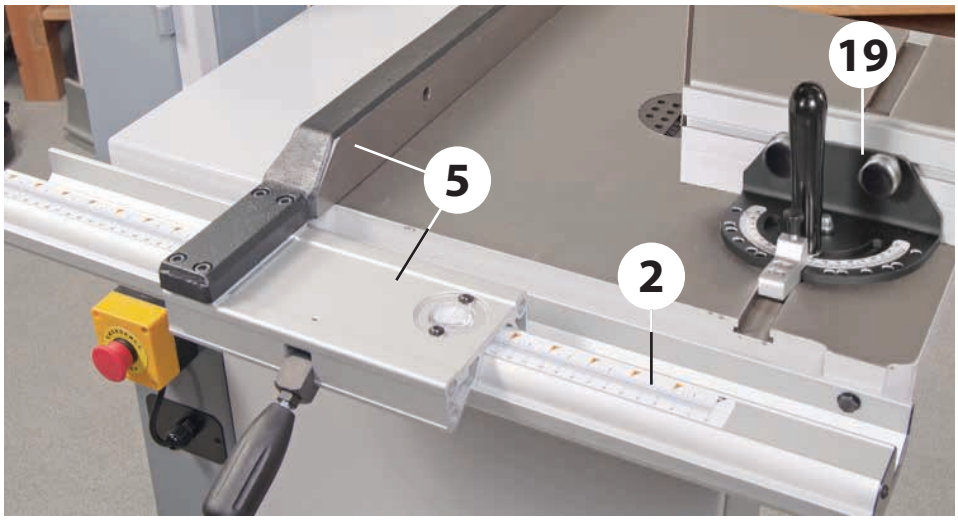

Fence clamp assembly (5), Mitre fence (19), Fence rail with scale (2)

Scale magnifying glass

Upper blade guide height scale and pointer

Table levelling stop bolt

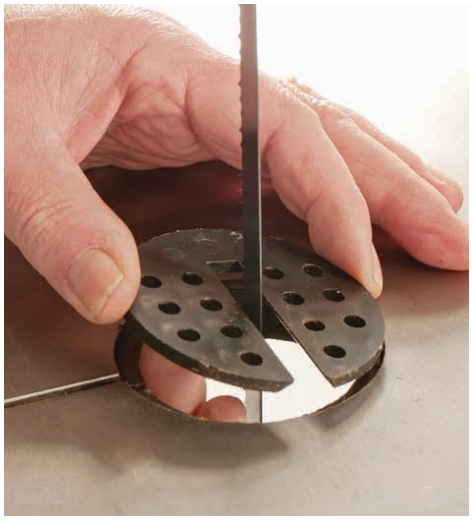

Table insert

ILLUSTRATION AND PARTS DESCRIPTION

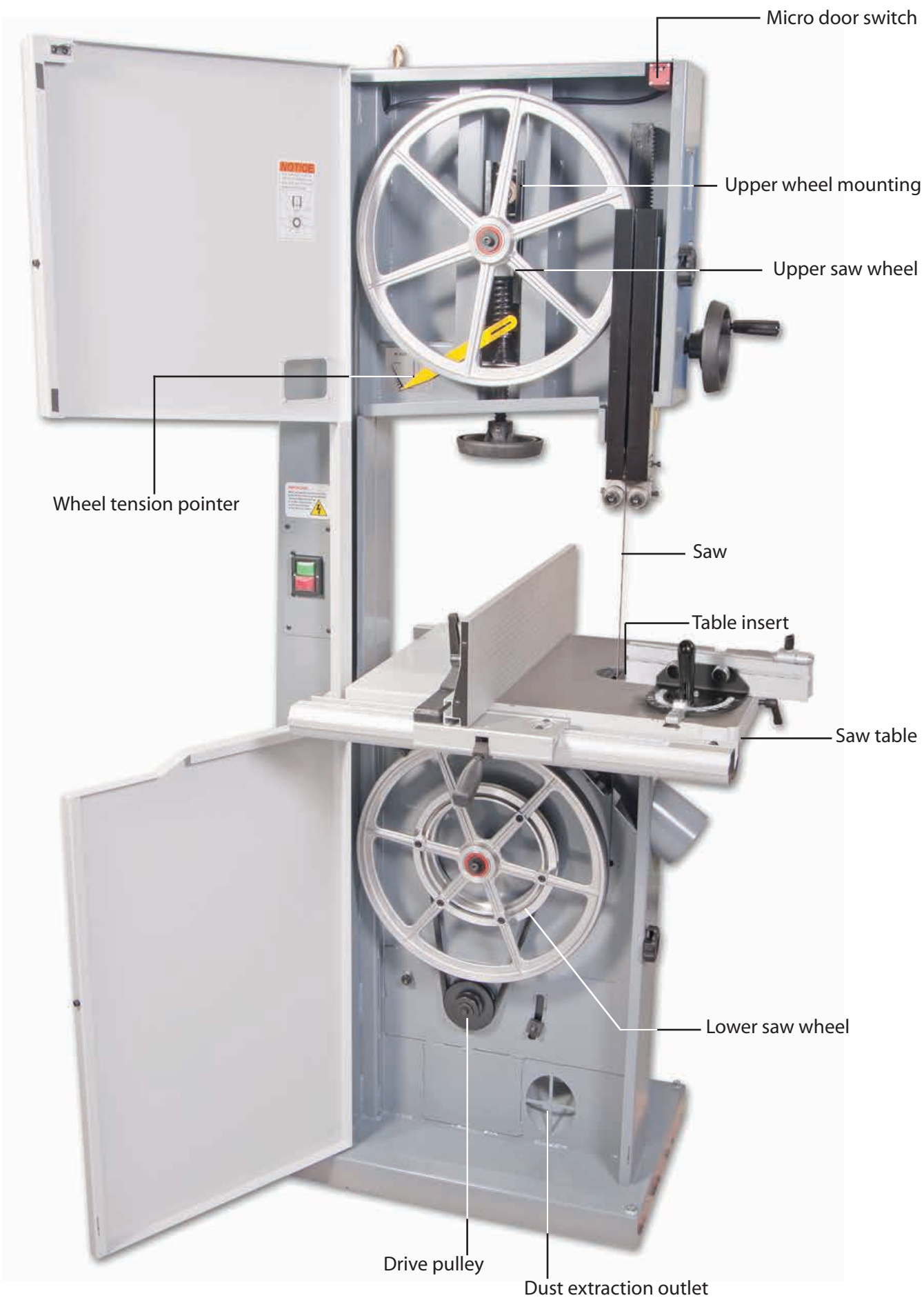

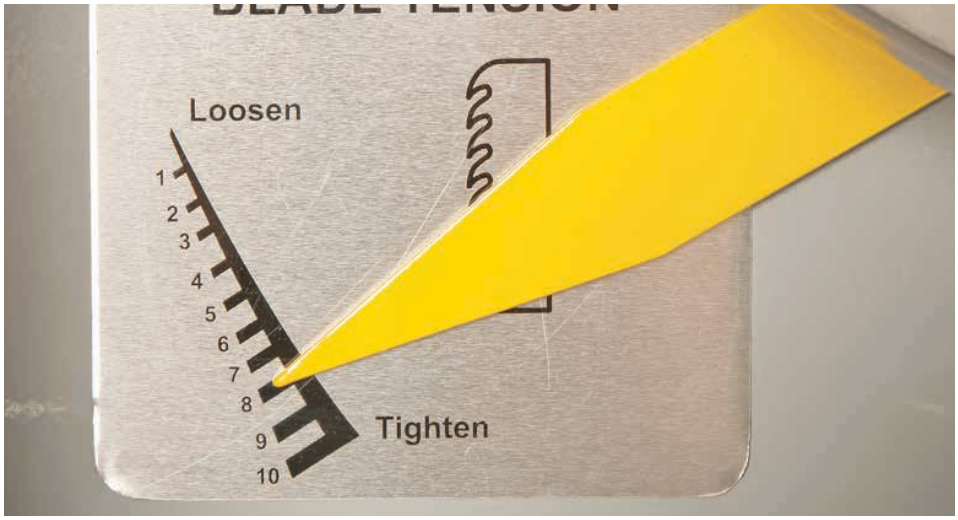

Wheel tension scale and pointer

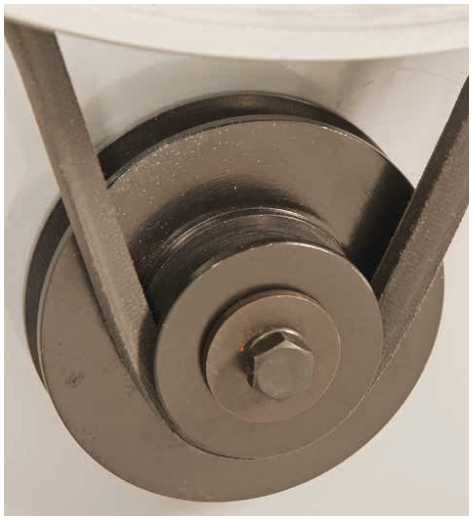

Two position drive pulley

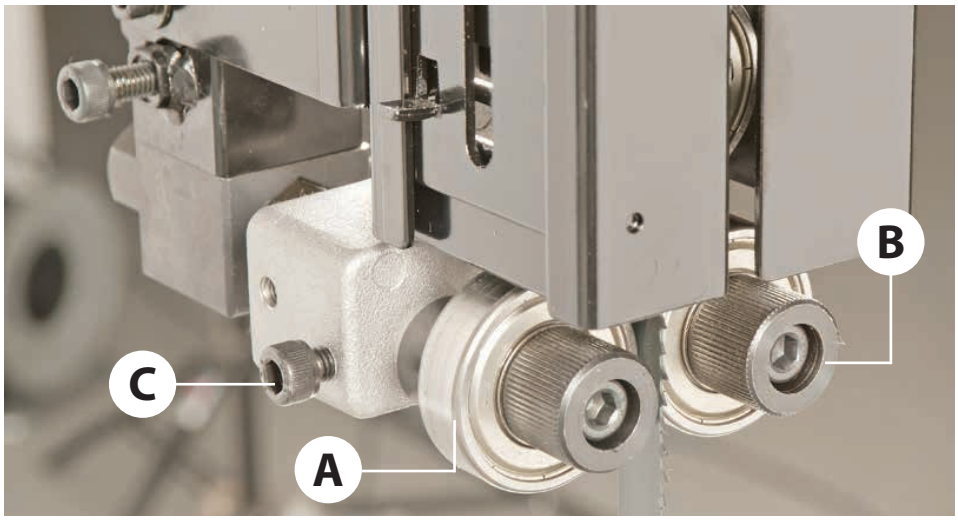

Upper bearing blade guides (A), Blade guide adjusting knob (B), Blade guide fore and aft clamping screw (C)

Blade tensioning spring

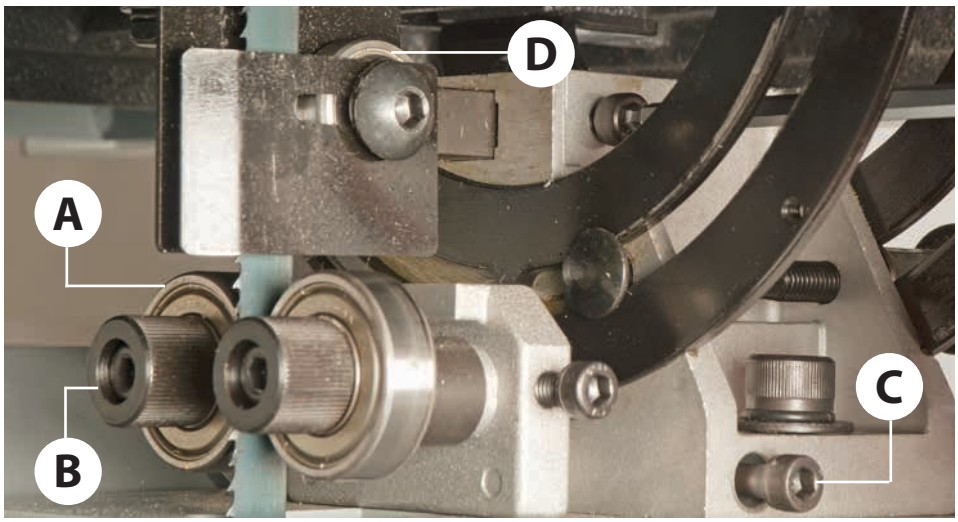

Lower bearing blade guides (A), Blade guide adjusting knob (B), Blade guide fore and aft clamping screw (C), Rear thrust bearing (D)

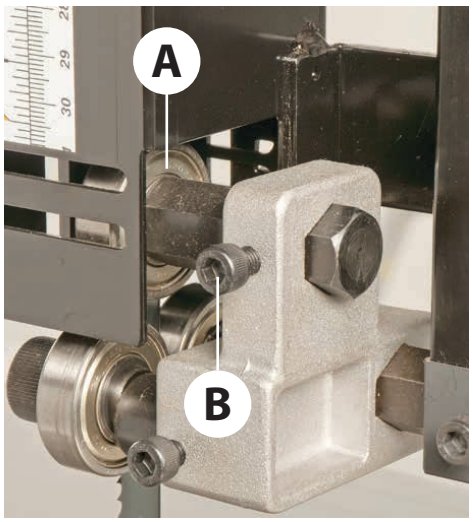

Upper blade thrust bearing (A) and adjusting screw (B)

ILLUSTRATION AND PARTS DESCRIPTION

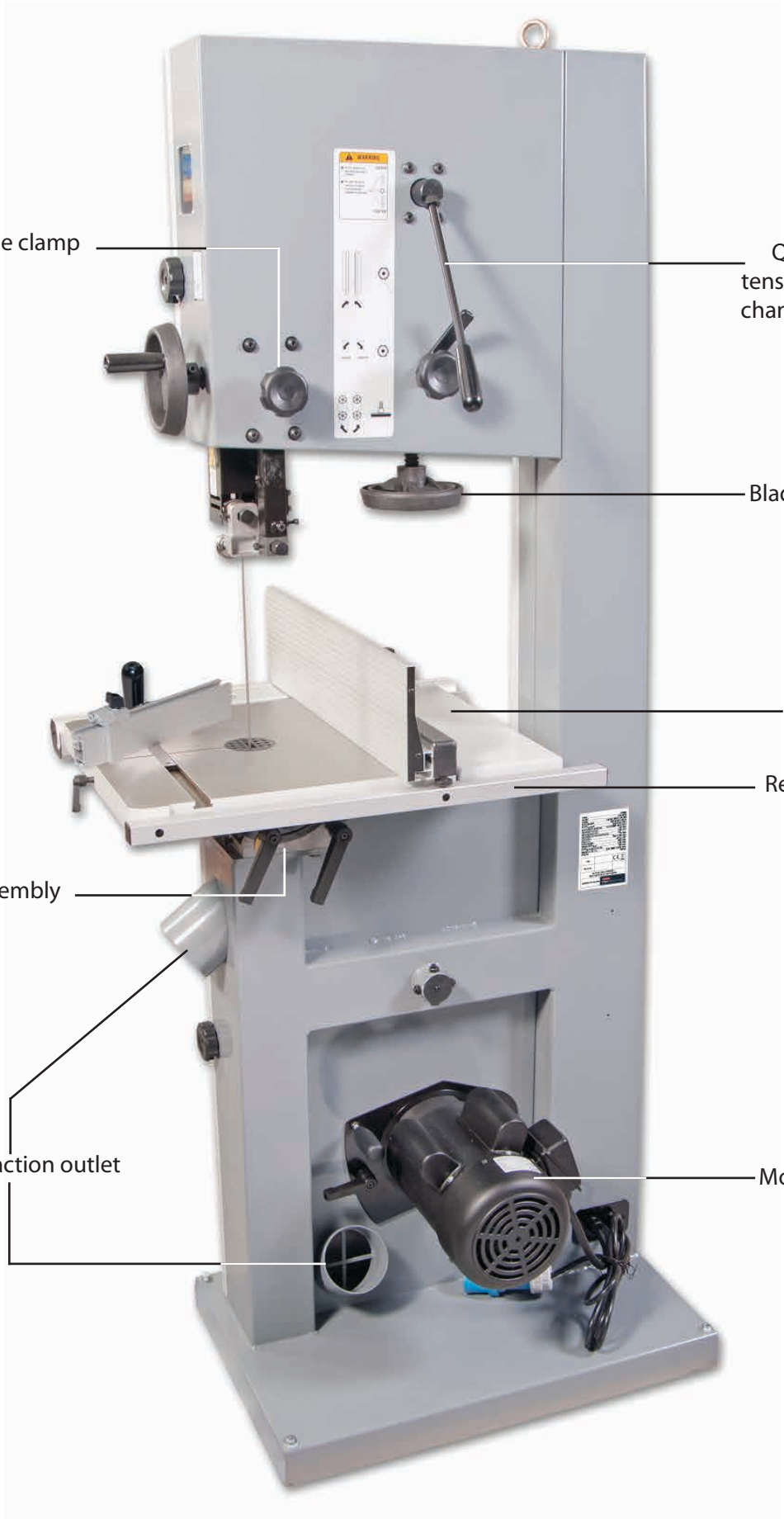

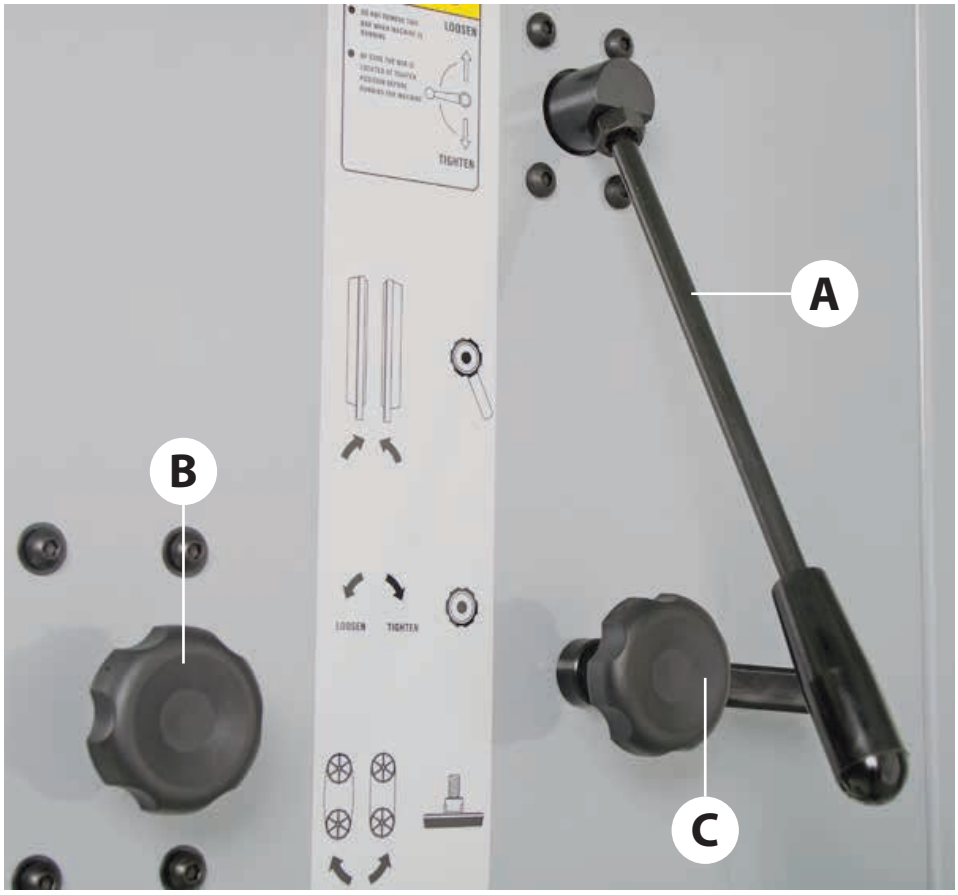

Quick release tensioning blade lever (A), Upper blade guide clamping knob (B), Tracking control knob & locking handle (C)

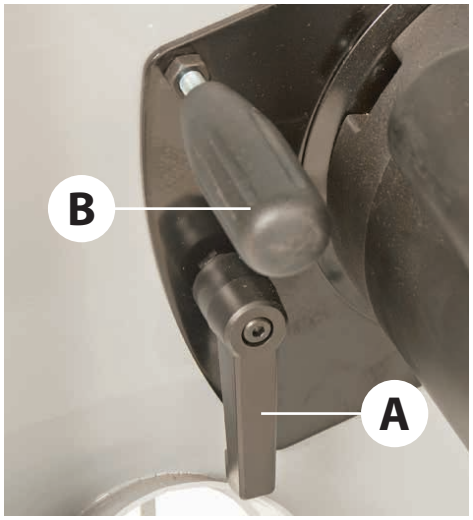

Motor locking handle (A), Motor repositioning handle (B)

Blade tensioning wheel

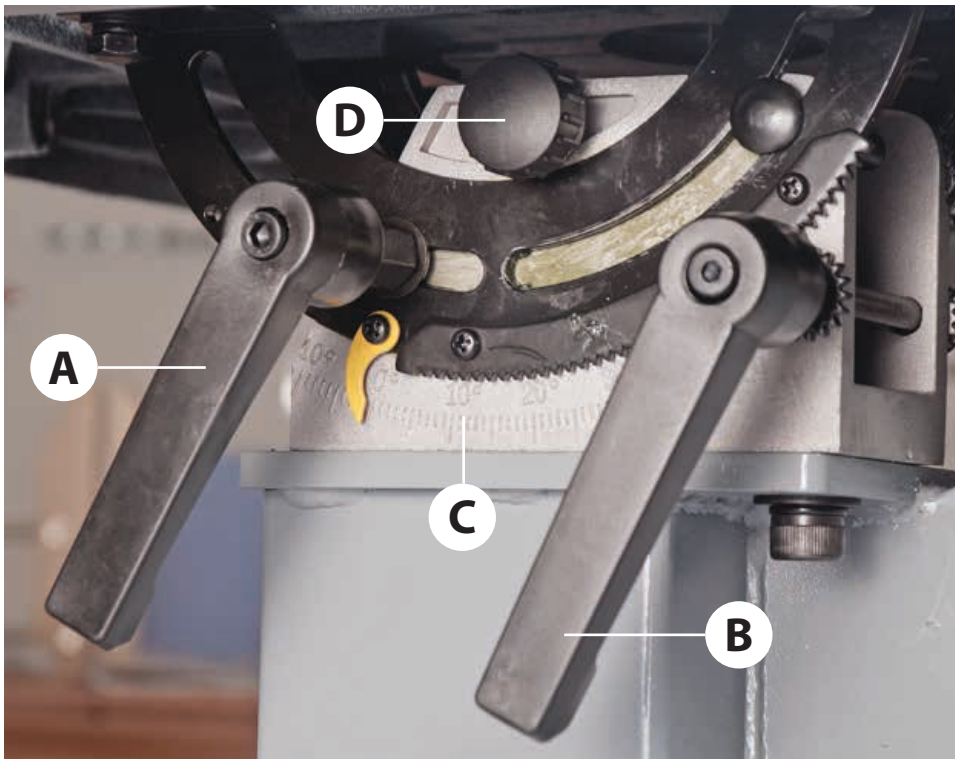

Tilt quadrant clamping handle (A), Table adjusting handle (B), Tilt quadrant scale (C), Lower thrust bearing adjusting knob (D)

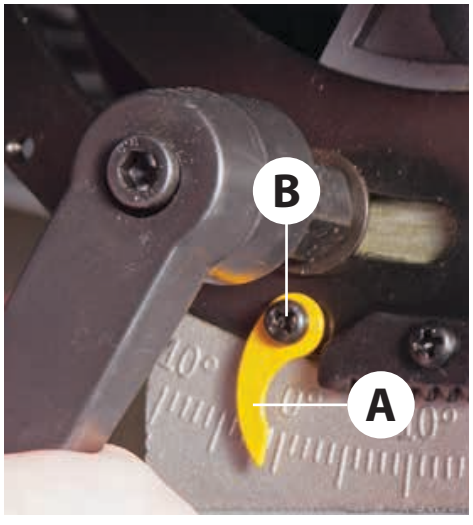

Tilt quadrant scale pointer (A) and adjusting screw (B)

DISCONNECT THE SAW FROM THE MAINS SUPPLY!

Tensioning and tracking the blade

Make sure both top and bottom blade guides are well clear of the blade

Open the front covers fully, giving good access to the top compartment of the saw and good visibility into the bottom compartment (see page 16). For tracking the blade first adjust all bearing guides so that they're well clear of the blade. Check that the blade is sitting approximately in the middle of the wheels, see fig 48-49. Apply some tension to the blade by turning the tensioning wheel clockwise, spin the top wheel by hand and check that the blade remains centrally on the tyre, see fig 50. If it does not, adjust the tracking by turning the tracking control at the rear of the head box, see fig 51. Viewed directly onto the tracking control wheel, turning clockwise should cause the blade to track to the rear of the tyre; anti-clockwise to the front, DO NOT make large adjustments).

Spin the top wheel again, check again. Continue until the blade tracks in the centre of the tyres with no appreciable to and fro movement. Push the tracking control lock up to lock the setting. Tension the blade fully. A sideways push of about 7-8 lbs(3+kgs) in the middle of the blade should allow a 1/4" (6.5mm)distension. Check the tracking again, adjust if necessary. Check that the drive belt is tensioned correctly. If it is slack, apply 'take up' pressure to the belt by loosening the motor locking handle and pushing down the motor until the belt is under tension then re-tighten the handle to lock the motor in position, see fig 52.

Connect the power to the machine. Stand clear and start the saw. Check that the saw is running smoothly, (no thumps, bumps, knocking or excessive vibration) and the blade appears to be tracking correctly (in one place). You can check this by holding a marker, e.g. a pencil, close to the back of the blade (approach from the back of the blade only) and check that the gap remains constant.

If it doesn't, adjust the tracking until it does. Make very small adjustments and wait for the saw to react before you adjust again, sometimes the reaction is not instantaneous. Once you are satisfied that the tracking is correct switch the machine off and allow it to run to a stop.

Fig 48-49

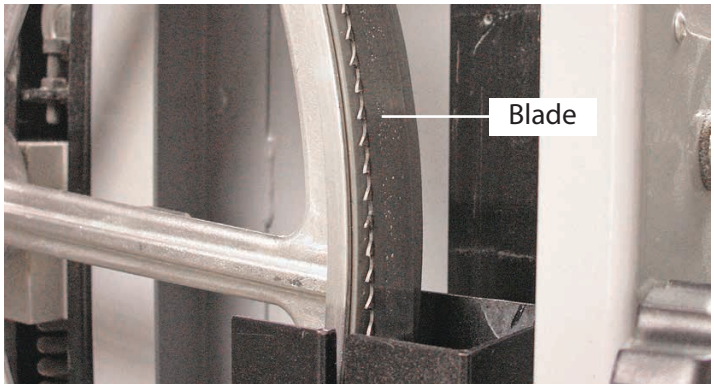

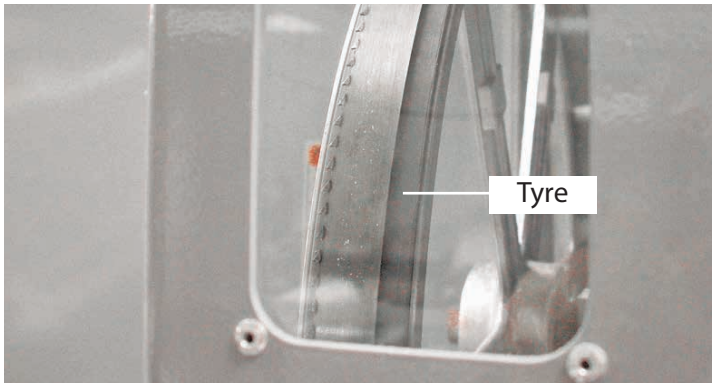

Fig 50

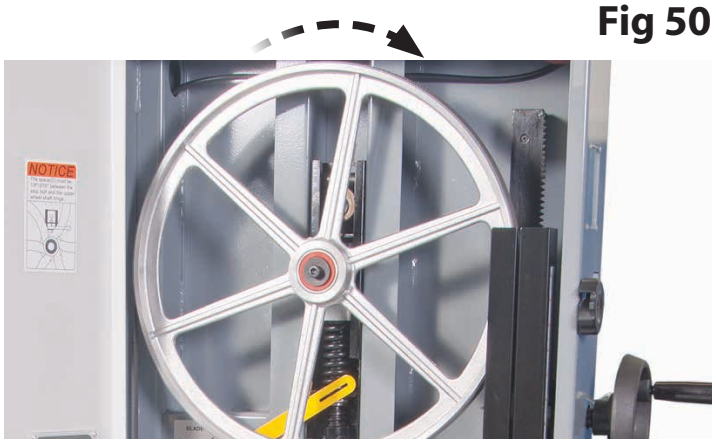

Fig 51

Fig 52

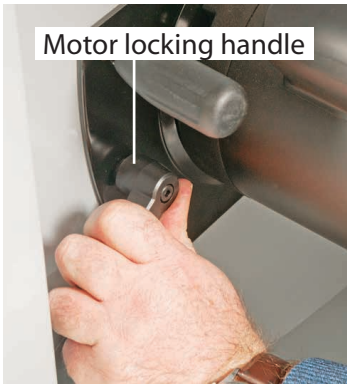

DISCONNECT THE SAW FROM THE MAINS SUPPLY!

Checking the table is square

Loosen the clamping handle beneath the table, clamping the tilt mechanism. Turn the tilt quadrant adjusting handle until the table is hard against its stop. This is a bolt with a lock nut screwed into the underside of the table, see fig 53. The head of the bolt acts as a stop when it strikes the machine frame. Tighten the clamping handle.

Fig 53

Make sure the upper blade guide is raised as high as possible. Place a square on the table and move it up against the blade (behind the teeth), see fig 54. Check that the blade is perpendicular to the table. If it is not, try resetting the table. If it is still not correct, loosen the table locking handle, see figs 55 and adjust the table stop bolt nut until perpendicularity is achieved, see fig 57.

Fig 54

Fig 55-56

Make sure the table is up against the stop by turning operating handle (A)

Fig 57

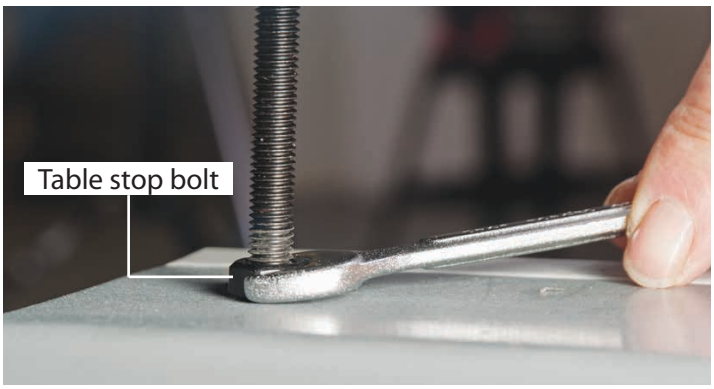

Tighten the lock nut and then re-check. When you are satisfied that the table is set correctly, check that the pointer of the tilt scale reads zero, if not, adjust it, see fig 58. Retighten the table clamping handles.

Fig 58

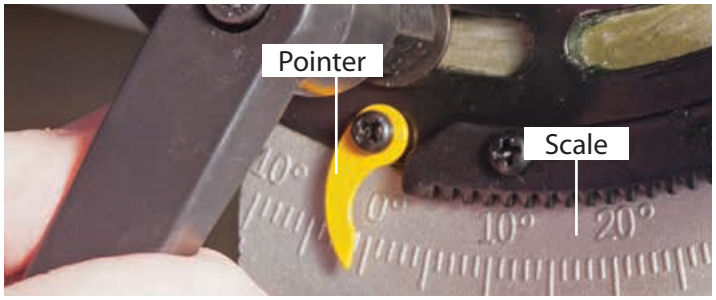

Continues Over....

Setting the Fence

To make sure the guide fence is at 90˚ line up the guide fence with the edge of the table's 'T' slot, see fig 59. If you find that the fence is out of alignment follow the steps below:

1 Clamp down the fence by pushing the locking lever down, see fig 60.

2 Loosen the 4 Hex bolts that secure the fence rail and adjust until the fence is in alignment with the 'T' slot, then re-tighten the bolts, see fig 61.

3 Replace the fence assembly to its original position.

Fig 59

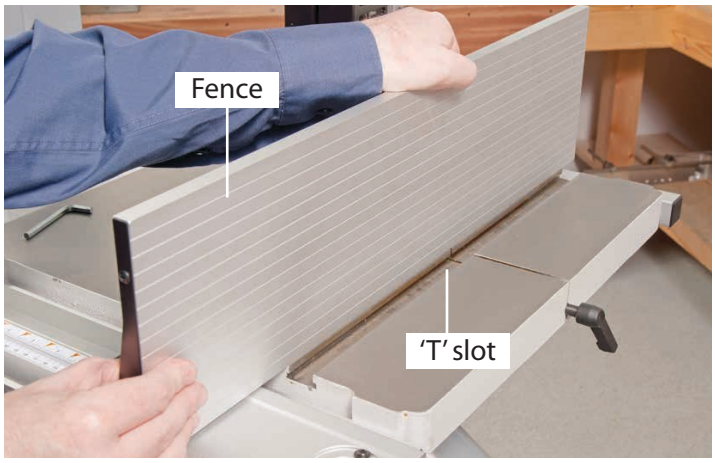

Fig 60-61

Setting the Blade Guides (above table)

DISCONNECT THE SAW FROM THE MAINS SUPPLY!

Lower the upper blade guide to approximately 1 1/2"(38mm) above the table. Clamp in place. Loosen the Hex screw **(A)**, holding the guide assembly in place and adjust the fore and aft position so that the leading edges of the side guide bearings are approximately 2 mm behind the gullets of the saw blade. Re-tighten the Hex screw, see fig 62. Loosen the Hex screw **(B**) that clamps the rear thrust bearing in position and adjust the thrust bearing to approximately 2mm behind the blade, re-tighten the Hex screw, see fig 63.

Fig 62

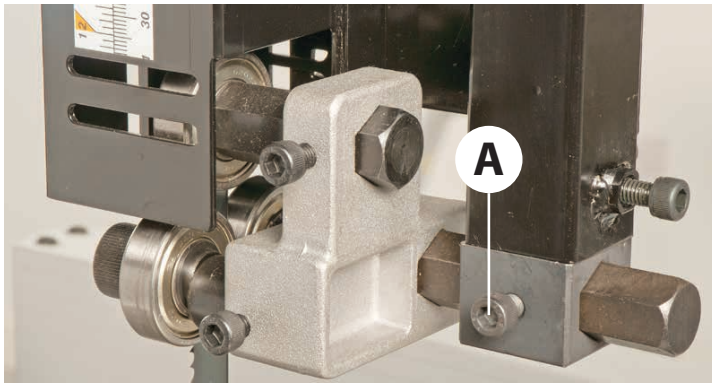

Fig 63

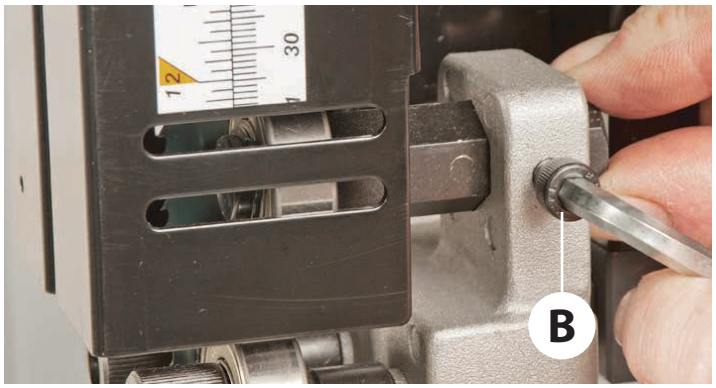

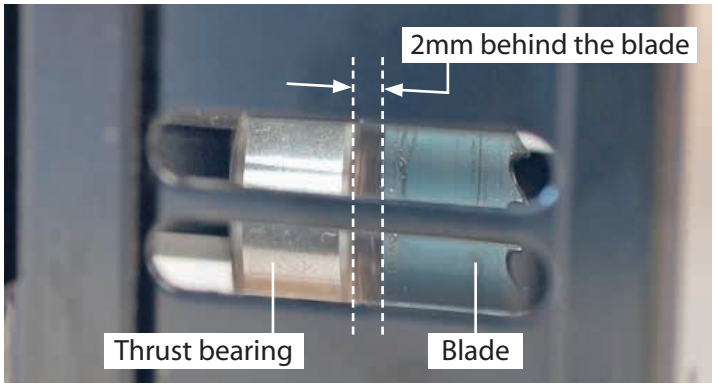

Loosen the Hex screw **(A)** holding one of the guide bearings and move to approximately 0.5mm from each side of the blade. **NOTE: A sheet of A4 of photocopy paper is approximately 0.5mm thick**. Adjust the guide bearing by turning the adjusting knob (1), until the guide bearing is set to the correct thickness. Re-tighten the Hex screw **(A)**, see fig 64-65. Repeat for the other guide bearing. Gently push the blade back against the thrust bearing, use a scrap of wood and check that the side bearings are still behind the teeth of the blade.

Fig 64-65

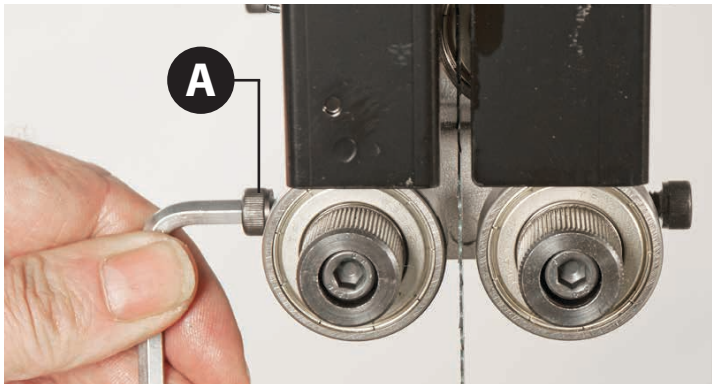

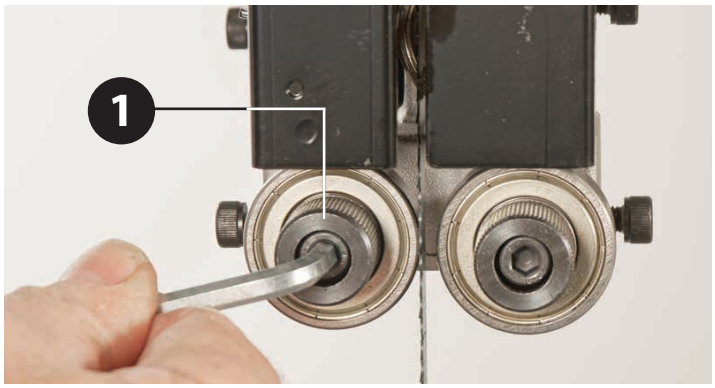

Setting the Blade Guides (below table)

Beneath the table loosen the Hex screw (C) holding the lower blade guide assembly in place and position so that the leading edges of the side guide bearings are approximately 2mm behind the gullets of the saw blade. Re-tighten the Hex screw (C), see fig 66.

Note: The guide bearing should always be set behind the teeth of the saw.

Fig 66

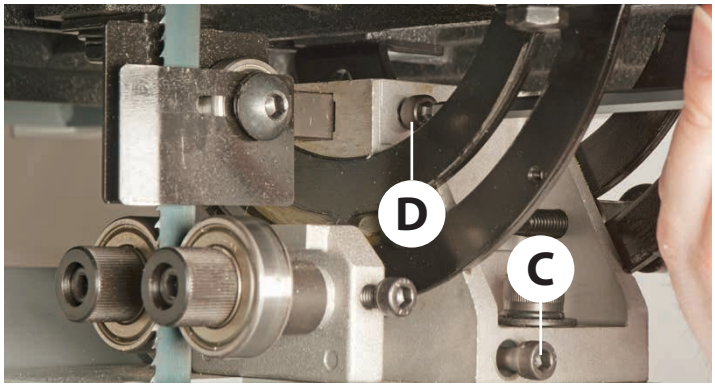

Rotate the top wheel by hand, at this point. None of the bearings should come into contact with the blade-only when in use. Adjust the lower blade guides, and set them similarly to the upper guides, using a Hex key to release and tighten the Hex screws. To adjust the lower thrust bearing, loosen the Hex screw **(D)**, see fig 66, turn the

Fig 67-68

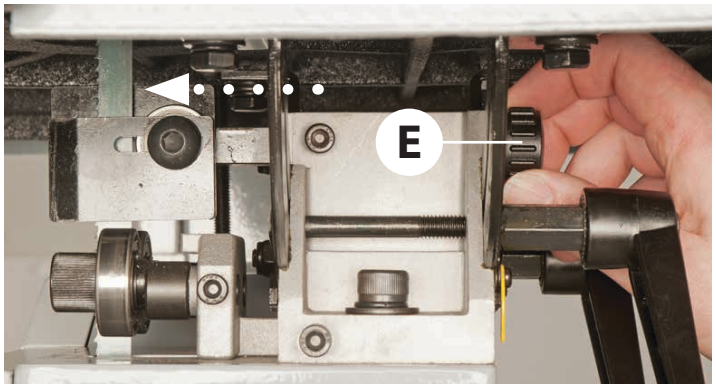

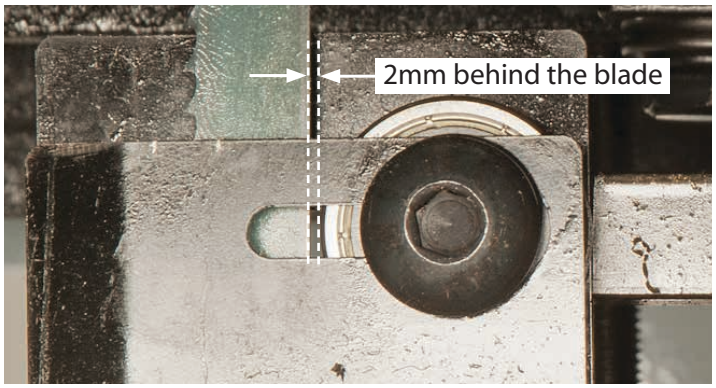

adjusting knob **(E)** to move the thrust bearing approximately 2mm behind the blade, see fig 67-68. Re-tighten the Hex screw **(D)**, see fig 66. When all adjustments have been made, recheck that when the blade is pressed back against the thrust bearing, both the upper and lower side guides are still behind the teeth of the saw. When all adjustments are complete re-connect the power, switch the saw on, allow to run for several minutes, check that the blade is still tracking correctly, there is no excessive vibration, etc. Switch off. **The saw is ready to be used.**

OPERATING INSTRUCTIONS

1. Make sure you have read and fully understood the general instructions and safety precautions that are printed in the preceding pages of this manual.

2. Before connecting the machine to the supply; check the machine for obvious signs of damage, paying particular attention to the plug and the power cable. Rectify or have rectified any damage you discover. Check that the blade you are using is the correct one for the job in hand. Change the blade if necessary. Check the blade is not damaged; is clean, sharp, tracks properly and is correctly tensioned.

3. Set the upper blade guide to approximately 12mm (1/2") above the height of the work piece.

Continues Over....

4. Check, especially on site, that there are no foreign objects e.g. old nails, screws, small stones etc embedded in the material you are about to cut.

5. Check that all accessories, tools etc., that have been used to set the machine up, are removed and set carefully aside or stowed away correctly.

6. Ensure the machine is switched off. Plug the power cable into a correctly rated switched socket outlet. If extension leads are being used, check these for damage, do not use if damaged; if you are working outside, check that any extension cables in use are rated for outside work. Switch on. Allow the saw to run up to speed.

7. Make sure that the material you are about to cut is within the machine's capacity, and the cut you are about to make is within the blades' capabilities, e.g. do not try to cut a 1" radius curve using a 5/8" blade.

8. Make sure the blade is not in contact with the material when you start the saw. Start the cutting operation. Do not try to cut too quickly; the correct cutting speed, if one could be so precise, would never see the blade pushed back against the thrust bearing, the saw would cut and clear the saw line at the rate the work piece was fed into it. If you notice that you require more and more pressure to effect the cut, and the blade is in continual contact with the thrust bearing, the chances are the blade is becoming blunt. Check and change if necessary.

Do not let go of the work piece, if you have to change your grip, make sure one hand is holding the material at all times.

9. If you are cutting long pieces of material think about sawing cutouts (i.e. a saw cut from the edge of the material to the saw line) along the saw line so that you can discard the off cuts as you progress down the saw line.

10. Observe the old woodworkers' adage of never allowing your hand/fingers within one handbreadth of the blade.

11. If you have to cut very small pieces of material, arrange or manufacture some form of 'shoe' to carry the timber. If the work piece is exceptionally small, find something to use as a sacrificial carrier and mount the work piece on it with double sided tape, or similar.

12. Remember to check the blade tension after a new blade has been 'working' for 30-60 mins. The blade will 'stretch' slightly when new.

13. Do not release the tension on the saw blade when work is complete. The blades and the main saw frame do not respond kindly to constant changes in stress and tension. Only release the tension to change the blade or once work has finished for the day. The blade in tension over a long period of non-use will cause the tyres to develop 'flat' spot. Open the saw cut, either by pulling apart or driving a wedge in close to the back of the blade. Try to wriggle the blade free of the saw. If this is not possible; check that the saw is free in the cut, start the saw, allow it to run up to speed and 'cut out' as quickly as possible. The removal of the 'off cut' may well prevent the saw jamming again if you resume the original cut).

WARNING! IF THE SAW JAMS! SWITCH OFF IMMEDIATELY.

CHANGING THE SAW BLADE

Put the table back to the level position if it has been tilted. Set the upper blade guide assembly approximately midway in the throat. Open the top and bottom covering doors, see figs 69-70. Remove the table insert.

Fig 69-70

Remove the table stabilising bolt, release the blade tension by pulling the quick release lever towards you, see fig 71, the blade can be easily slipped off the wheels. Remove the blade carefully, 'wiggling' it clear of the upper blade guard and through the plastic lower blade guard and out through the slot in the table. NOW is an excellent time to clean out the interior of the machine; remove the impacted 'crud' from the tyres, apply a little light oil to the screw threads of the blade and drive belt tensioners and the tracking control. The pivots and the slides of the top wheel mounting assembly and the captive stub axle of the drive belt tensioner in its slot could likewise be lightly oiled. If you are fitting a new blade, it will have been supplied to you "folded", bound together in this configuration with tape or tie wrap.

Fig 71

WARNING! BE VERY CAUTIOUS WHEN YOU 'UNFOLD' THE BLADE; IT TENDS TO 'SPRING' OPEN, BLADE AND TEETH GOING EVERYWHERE.

Also check that the blade did not "unfold" inside out. i.e. looking at the right side front of the loop, the teeth should be on the front of the blade and pointing down. If you can't arrive at this view, turn the blade inside out from its current position and look again.

MAKE SURE THE BLADE TEETH ARE POINTING DOWN!

Open up all blade guides so that they are clear of the blade. Hold the blade approximately midway on either side of the loop and feed it into the table slot. When you get to the table insert cutout void, work the left side of the loop into the slot in the guard in the neck of the main saw frame. 'Wriggle' the right hand side of the blade through the slot in the lower finger guard and through the guard on the upper blade guide assembly, see figs 72-73-74.

Fig72

Fig 73-74

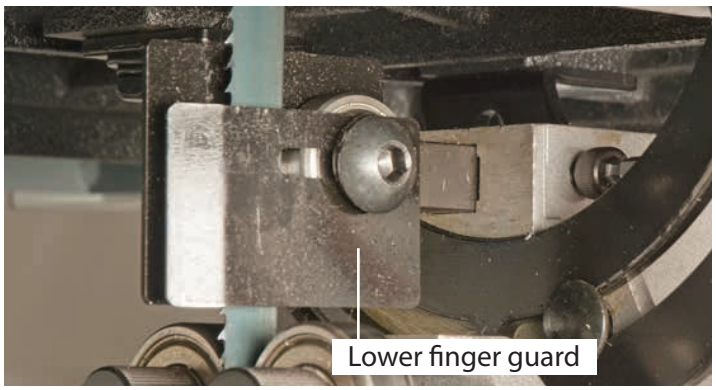

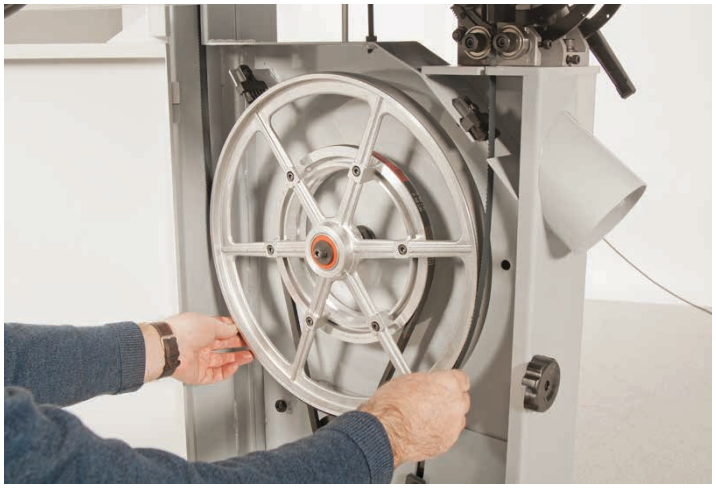

Ease the blade over the wheels and locate the blade in the blade guides. Check that the blade is sitting approximately in the middle of the wheels and re-tension the blade by pushing the quick release lever forward. Turn the top wheel by hand to ensure the blade will not skip off the wheels and the blade is travelling in the blade guides. When you are sure that the blade is "ON" and stable, re-fit the table stabilising bolt and re-fit the table insert. Loosen the upper blade guide clamp and set the upper blade guide assembly so that the top of the blade guide is level with the centre of the top drive wheel, see fig 75. Re-tighten the clamp. Now carry out the procedures as detailed in Setting up the saw.

Fig 75

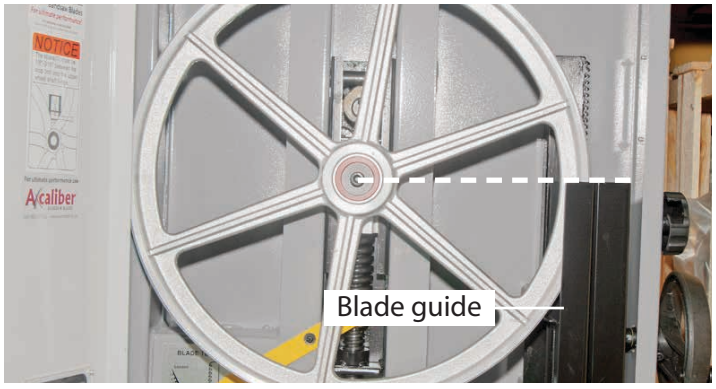

Continues Over....

DISCONNECT THE SAW FROM THE MAINS SUPPLY!

The bandsaw drive pulley has two speed positions, see fig 80. To change the speed to either 390 or 840m/minute, follow the instructions below.

Open the upper and lower doors, see fig 76. Release the tension on the drive belt by loosening the motor locking handle and pulling up the motor until the belt is loose, see figs 77-78.

Fig 76

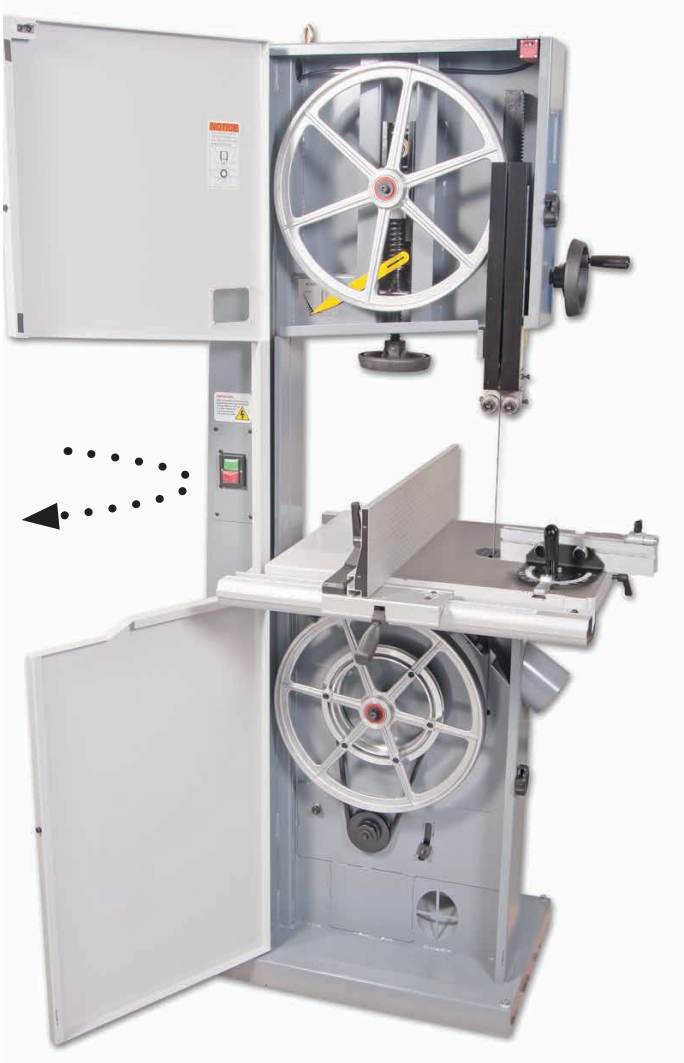

Fig 77-78

With the drive belt tension removed, very carefully reposition the drive belt, see fig 79. **NOTE: Make sure the belt is seated correctly in one of the drive pulley grooves.** Push the motor down to re-tension the belt thumbs.

Fig 79

Fig 80

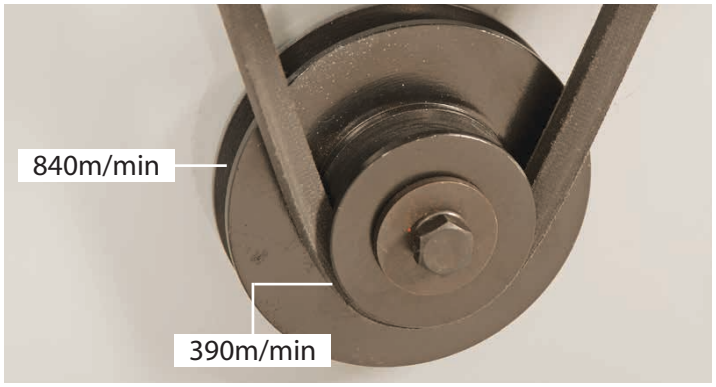

The picture above shows the two drive pulley positions with the speeds available.

Daily

• Keep the machine clean.

• Check the saw blade for missing teeth and cracks, see fig 81.

• Spray oil the bare metal surfaces.

Weekly

• Open the top and bottom wheel covers and clean out all saw dust.

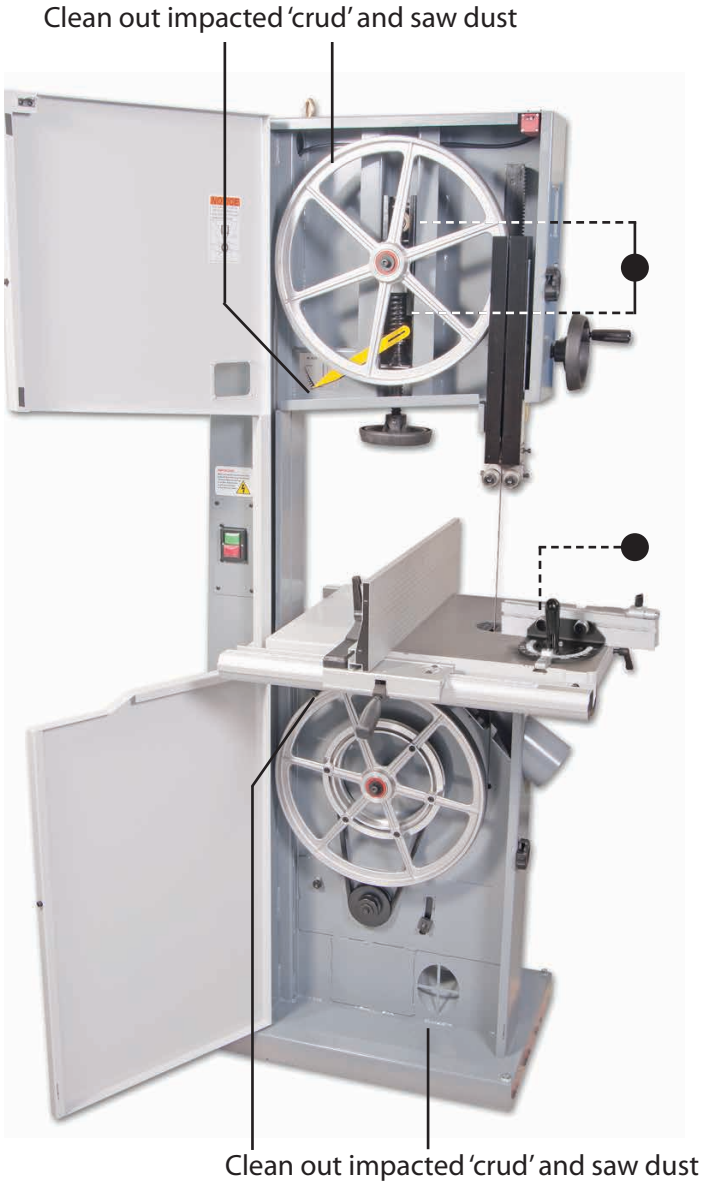

Monthly

• Open the lower and upper door and check the condition of the tyres and the drive belt, see figs 81-82-83.

• Clean impacted 'crud' from the tyres, apply a little oil to the screw threads of the blade and drive belt tensioners. **DO NOT USE OIL** near the belt.

• The pivots and the slides of the top wheel mounting assembly and the captive stub axle of the belt tensioner in its slot could likewise be lightly oiled.

• Using an air line **(wearing goggles)** blow out the motor casing.

Fig 81-82-83

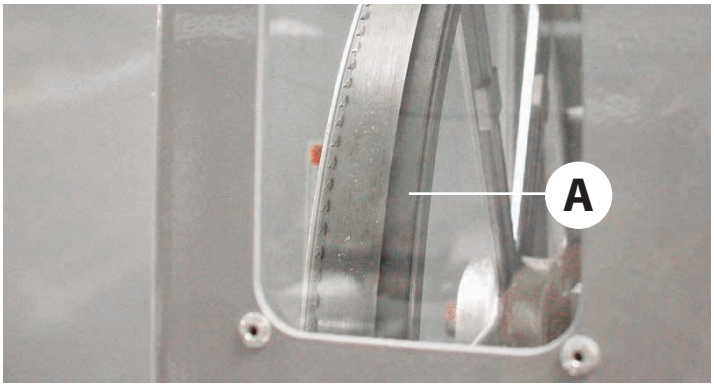

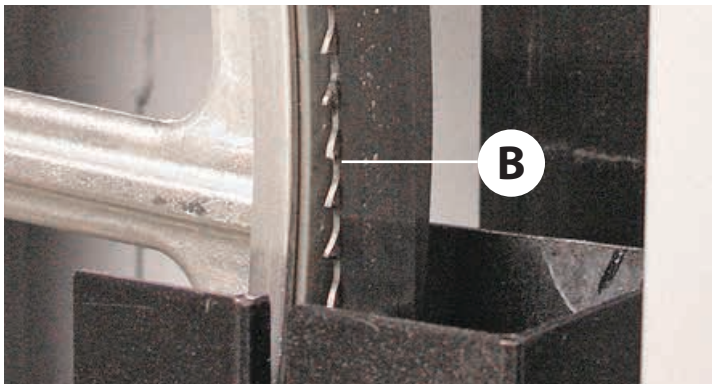

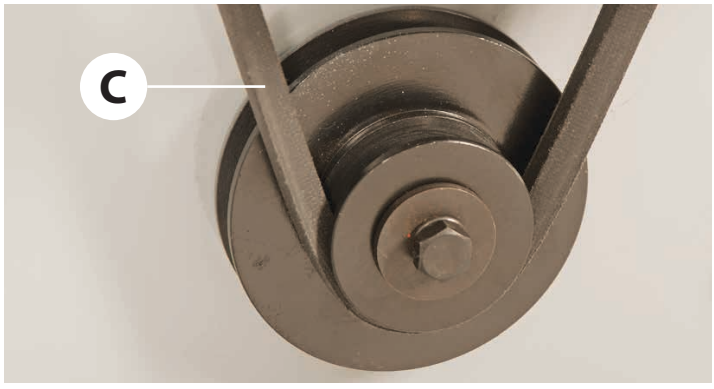

• Check the condition of the tyres (A)
• Check for missing teeth (B)
• Check the condition of the drive belt (C)

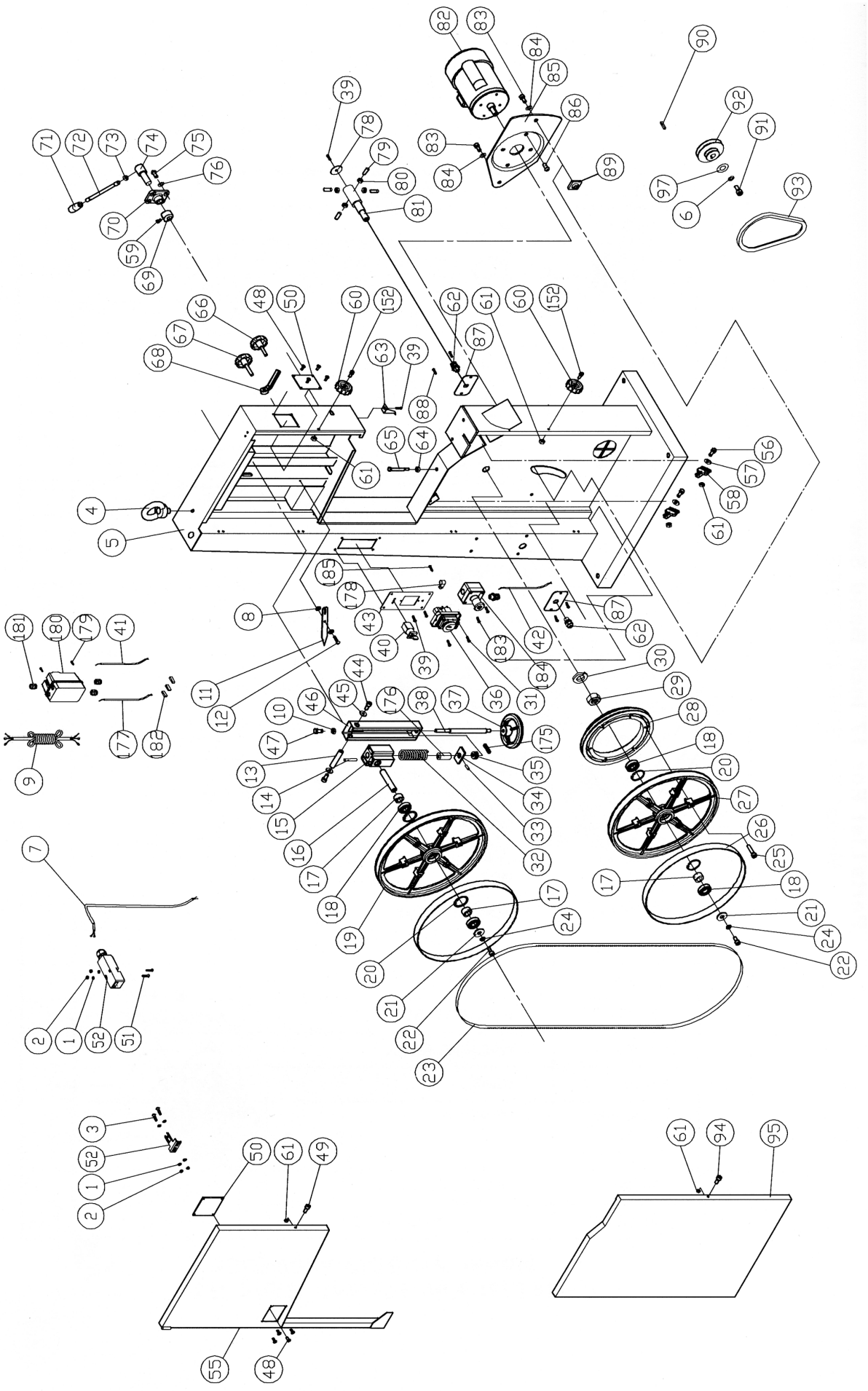

No	Part No	Description	Size	Qty
1	WF040808	FLAT WASHER	M4x08	6
2	NH040700	NUT	M4	4
3	SP040200	PAN HEAD SCREW	M4x8	2
4	995101	RING	M10	1
5	135128	MACHINE BODY		1
6	WS080000	SPRING WASHER	M8	1
7	IC135042	SWITCH CORD		1
8	WF061310	FLAT WASHER	M6x Φ13	2
9	IC135020	POWER CORD		1
10	NH061000	NUT	M6	1
11	135040	POINTER		1
12	135073	STEP SCREW		1
13	135012	UPPER SHAFT		1
14	PS053500	SPRING PIN	Φ5x35	1
15	135017	UPPER WHEEL SHAFT HINGE		1
16	135066	UPPER WHEEL SHAFT		1
17	135039	BUSHING		2
18	BB620403	BALL BEARING	6204LLU	4
19	135024	UPPER WHEEL	Φ17″	1
20	RR470000	RETAINING RING	R47	4
21	WF083030	FLAT WASHER	M8x Φ 30	2
22	SR089400	HEX SOCKET BOLT	M8X16	2
23	135075	SAW BLADE	1 /2″x131.5″x 3340±4.2x0.5mm	1
24	WS080000	SPRING WASHER	M8	2
25	SR060600	HEX SOCKET BOLT	M6x30	6
26	135105	TIRE		2
27	135014	LOWER WHEEL	Φ17″	1
28	135007	IDLE PULLEY		1
29	NH633801	NUT	1″-14UNF	1
30	WS630000	SPRING WASHER	1″	1
31	ST039304	TAPPING SCREW	3.5X12(AB)	2
32	135032	SPRING		1
33	PS031600	SPRING PIN	Φ3X16	1
34	135042	LOCATE BLOCK		1
35	994301	BEARING	51201	1
36	170239	SWITCH	230V50HzKJD-12	1
37	135002	HANDLE WHEEL		1
38	135003	ADJUSTING BOLT		1
39	SF050200	PAN HEAD BOLT W/FLANGE	M5X10	4
40	135108	MULTIFINGER SWITCH		1
41	IM135006	MOTOR CORD		1
42	IC135009	STOP SWITCH CORD		1
43	135133	SWITCH PLATE		1
44	SR089400	HEX SOCKET BOLT	M8x16	2
45	WF083030	FLAT WASHER	M8X Φ 30	2
46	135016	UPPER WHEEL SLIDING BRACKET		1
47	SR060500	HEX SOCKET BOLT	M6x25	1
48	BR000044	RIVET	Φ3.2x10	8
49	SR060200	HEX SOCKET BOLT	M6x10	1
50	135004	LIMPID PIECE		2
51	SF040700	PAN HEAD BOLT W/ FLANGE	M4x35	2
52	136457	DOOR LATCH SWITCH (ASM)	AZD-S11	1
55	136201	UPPER WHEEL COVER		1
56	SH060500	HEX SOCKET BOLT	M6x25	2
57	WF061310	FLAT WASHER	M6xΦ13	2
58	135051	BRUSH		2
59	SR060500	HEX SOCKET BOLT	M6x25	1
60	135041	KNOB		2
61	NL061000	NYLON NUT	M6	6
62	136013	STRAIN RELIEF	M16	3
63	135011	HEIGHT POINTER		1
64	NH081300	NUT	M8	1
65	SH081800	HEX HEAD BOLT	M8x90	1
66	135022	KNOB SCREW		1
67	135020	KNOB SCREW		1
68	135028	LOCATE HANDLE	M10	1
69	135030	CAM		1
70	135038	LOCATE BLOCK		1
71	620021	KNOB		1
72	620020	LEVER ROD		1
73	NH121900	NUT	M12	1
74	135036	SHAFT		1
75	SJ080400	HEX SOCKET BOTTOM HEAD SCREW	M8x20	4
76	WS080000	SPRING WASHER	M8	4
78	135013	COVER		1
79	SS080400	SET SCREW	M8x20	4
80	NH081300	NUT	M8	4
81	135005	LOWER WHEEL SHAFT		1
82	MH135001	MOTOR	2 HP	1
83	SR100500	HEX SOCKET BOLT	M10x25	2
84	WS100000	SPRING WASHER	M10	2
85	135064	MOTOR BRACKET		1
86	SJ080400	HEX SOCKET BOTTOM HEAD SCREW	M8x20	4
87	136475	PLATE		2
88	ST040200	TAPPING SCREW	M4x10L	4
89	135065	LOCATE BLOCK		1
90	KS050535	KEY	5x5x35	1
91	SH080402	HEX HEAD BOLT	M8x20(L.H)	1
92	135008	MOTOR PULLEY		1
93	LA420000	V-BELT	A42	1
94	SR060200	HEX SOCKET BOLT	M6x10	1
95	135072	LOWER WHEEL COVER		1
97	WF083030	FLAT WASHER	M8x30	1
98	SR100700	HEX SOCKET BOLT	M10x35	2
99	NH101700	NUT	M10	1
102	AB135021	TRUNNION SUPPORT BRACKET (ASM)		1

Continues Over....

EXPLODED DIAGRAMS/LISTS

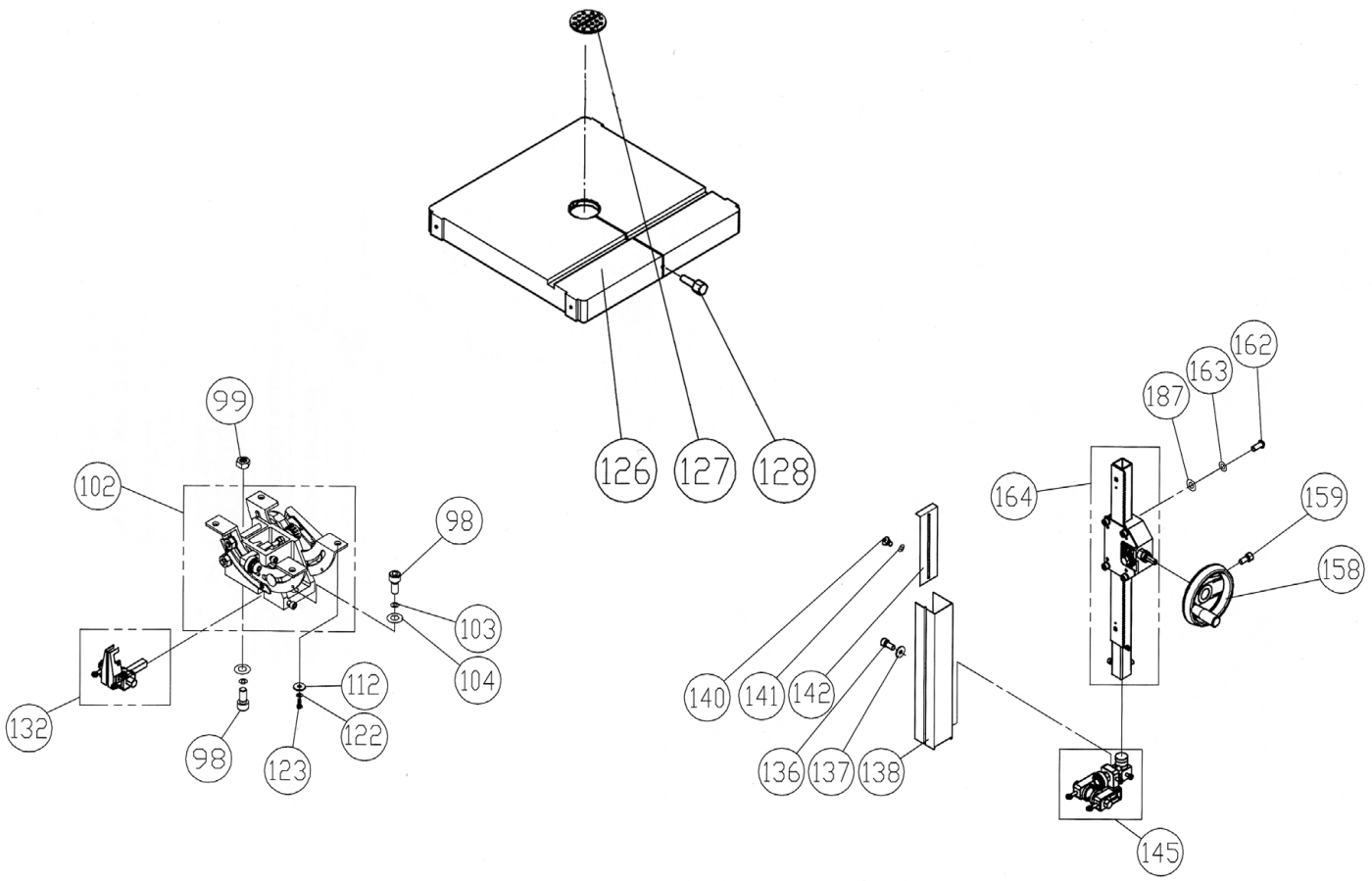

103	WS100000	SPRING WASHER	M10	2
104	WF102325	FLAT WASHER	M10xΦ23	2
112	WF081820	FLAT WASHER	M8xΦ18	4
122	WS080000	SPRING WASHER	M8	4
123	SH089400	HEX HEAD BOLT	M8x16	4
126	135019	TABLE	17″x17″	1
127	135010	TABLE INSERT		1
128	100038	TABLE PIN		1
132	AB135059	LOWER BLADE GUIDE SUPPORT (ASM)		1
136	SR050200	HEX SOCKET BOLT	M5x10	2
137	WF051210	FLAT WASHER	M5xΦ 12	2
138	135034	PROTECT COVER (ASM)		1
140	135073	STEP SCREW		1
141	135054	FLAT WASHER		1
142	135037	SLIDING PLATE		1
145	135055	UPPER BLADE GUIDE SUPPORT(ASM)		1
152	SR060400	HEX SOCKET BOLT	M6x20	2

158	135006	HANDLE WHEEL		1
159	SR060400	HEX SOCKET BOLT	M6x20	1
162	SJ080400	HEX SOCKET BOTTOM HEAD SCREW	M8x20	4
163	WS080000	SPRING WASHER	M8	4
164	AB135050	GUIDE BRACKET (ASM)		1
175	SR069300	SET SCREW	M6x10	1
176	135067	BUSHING		1
177	IC135016	CONTRAL CORD		1
178	998628	CORD CLAMP		1
179	SF050200	PAN HEAD BOLT W/ FLANGE	M5x10	2
180	IE11551F	MAGNETIC SWITCH	2HP/1PH/50HZ/240V	1
181	709421	STRAIN RELIEF	M20	3
182	136019	WIRE CONNECTOR	224-201	3
183	SP049300	PAN HEAD BOLT	M4X12	2
184	135129	STOP SWITCH		1
185	SF059300	PAN HEAD BOLT W/ FLANGE	M5X12	1
187	WF081818	FLAT WASHER	M8XΦ18	4

Fence Assembly

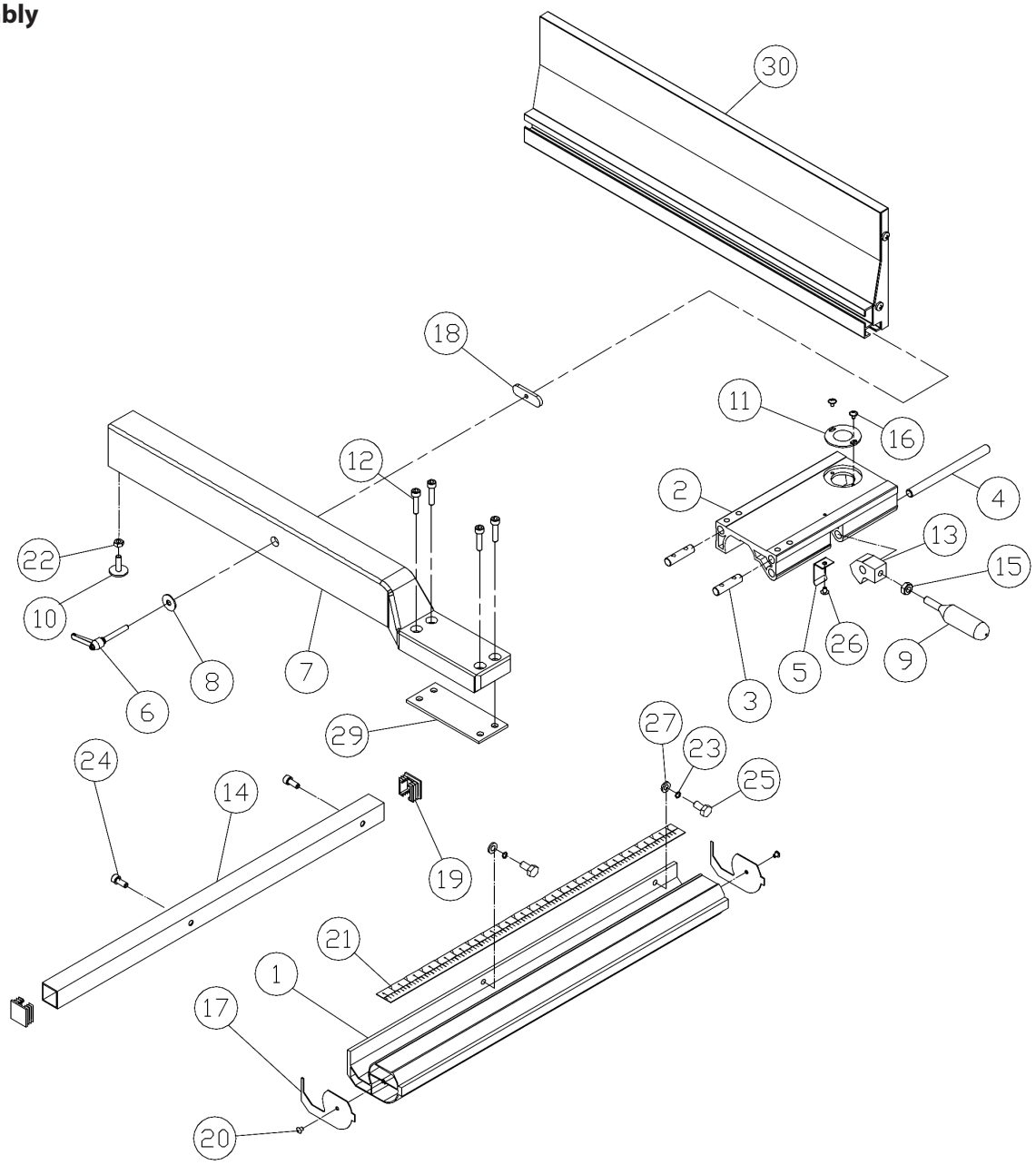

No	Part No	Description	Size	Qty
01	198018	FIXED BASE	640	1
02	198002	ADJUST BASE		1
03	198003	FIXED SHAFT		2
04	198005	SHAFT		1
05	198006	SPRING WASHER		1
06	198074	LOCK KNOB	M8x44	1
07	198077	SUPPORT TUBE	590	1
08	WE082320	FLAT WASHER	M8xΦ23	1
09	198013	HANDLE		1
10	198012	ADJUST SCREW		1
11	198007	CONVEX		1
12	SR060500	HEX SOCKET BOLT	M6x25	4
13	198004	FIXED LUMP		1
14	198020	SQUARE TUBE	640	1
15	NH081300	NUT	M8	1
16	SE049100	PAN HEAD BOLR W/ FLANGE	M4x6	2
17	198014	GUARD PIECE		2
18	200527	MOVING PLATE		1
19	198016	PLUGGED		2
20	ST039300	TAPPING SCREW	M3.5xl2	2
21	LM000539	SCALE		1
22	NH061000	NUT	M6	1
23	WS060000	SPRING WASHER	M6	2
24	SR069400	HEX SOCKET BOLT	M6xl6	2
25	SH060400	HEX HEAD BEILT	M6x20	2
26	SF049200	PAN HEAD BEER W/ FLANGE	M4x8	1
27	WE061310	FLAT WASHER	M6xl3	2
29	198008	BRACKET	T=3	1
30	AC198082	FENCE	590	1

Continues Over....

Guide Bracket Assembly

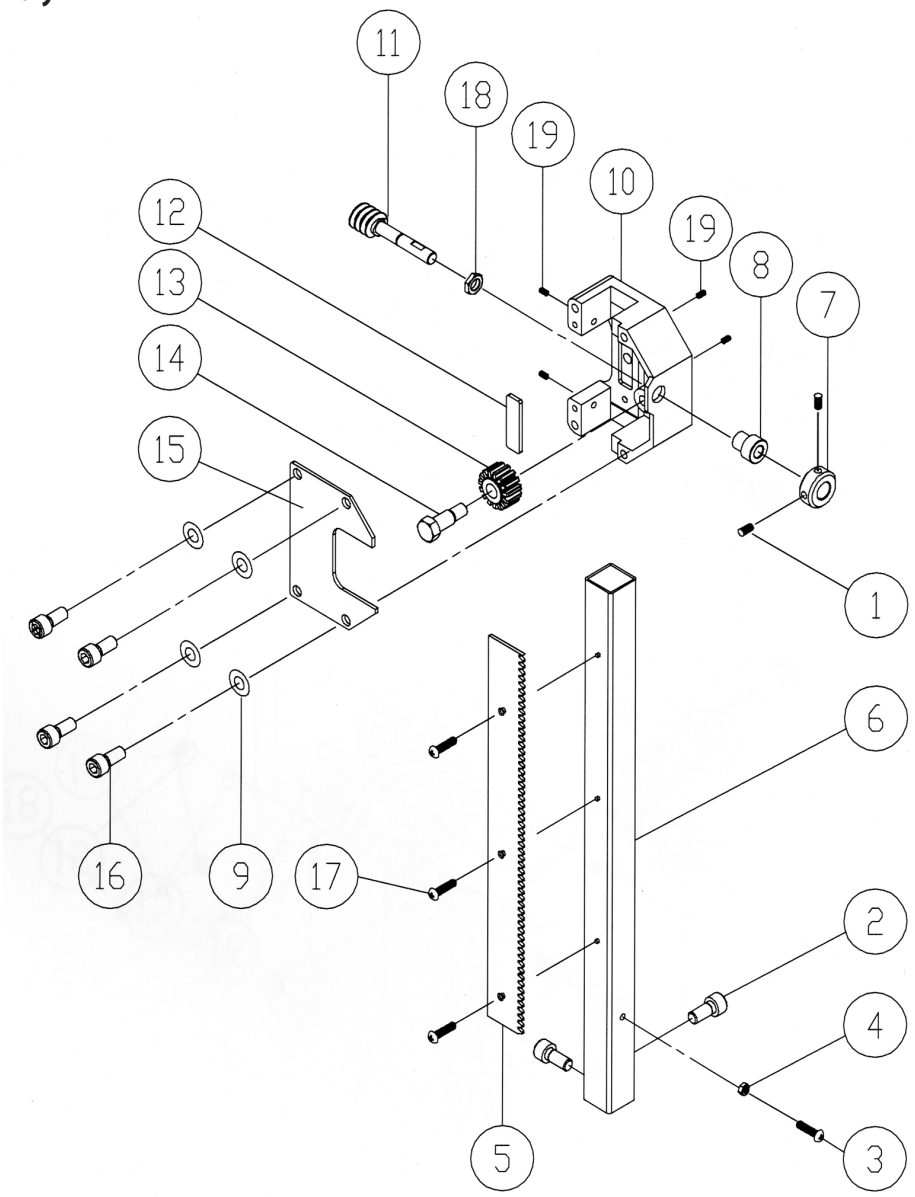

No	Part No	Description	Size	Qty
01	SS050100	SET BOLT	M5x5	2
02	SR069400	HEX SOCKET BOLT	M6xl6	2
03	SP040200	PAN HEAD BOLT	M4xl0	1
04	NH040700	NUT	M4	1
05	135029	RACK		1
06	135047	UPPER GUIDE HOSE		1
07	135015	LOCATE BUSHING		1
08	136453	BUSHING		1
09	WS080000	SPRING WASHER	M8	4

10	135050	GUIDE BRACKET		1
11	135033	WORM CYLINDER		1
12	135062	FIXED PLATE		1
13	135049	GEAR		1
14	016320	FIXED BOLT		1
15	135046	COVER		1
16	SR089400	HEX SOCKET BOLT	M8xl6	4
17	SN049200	COUNTER SUNK BOLT	M4x8	3
18	136473	NUT	M16xPL5	1
19	990306	SET BOLT	M7xl0	4

Trunnion Support Bracket

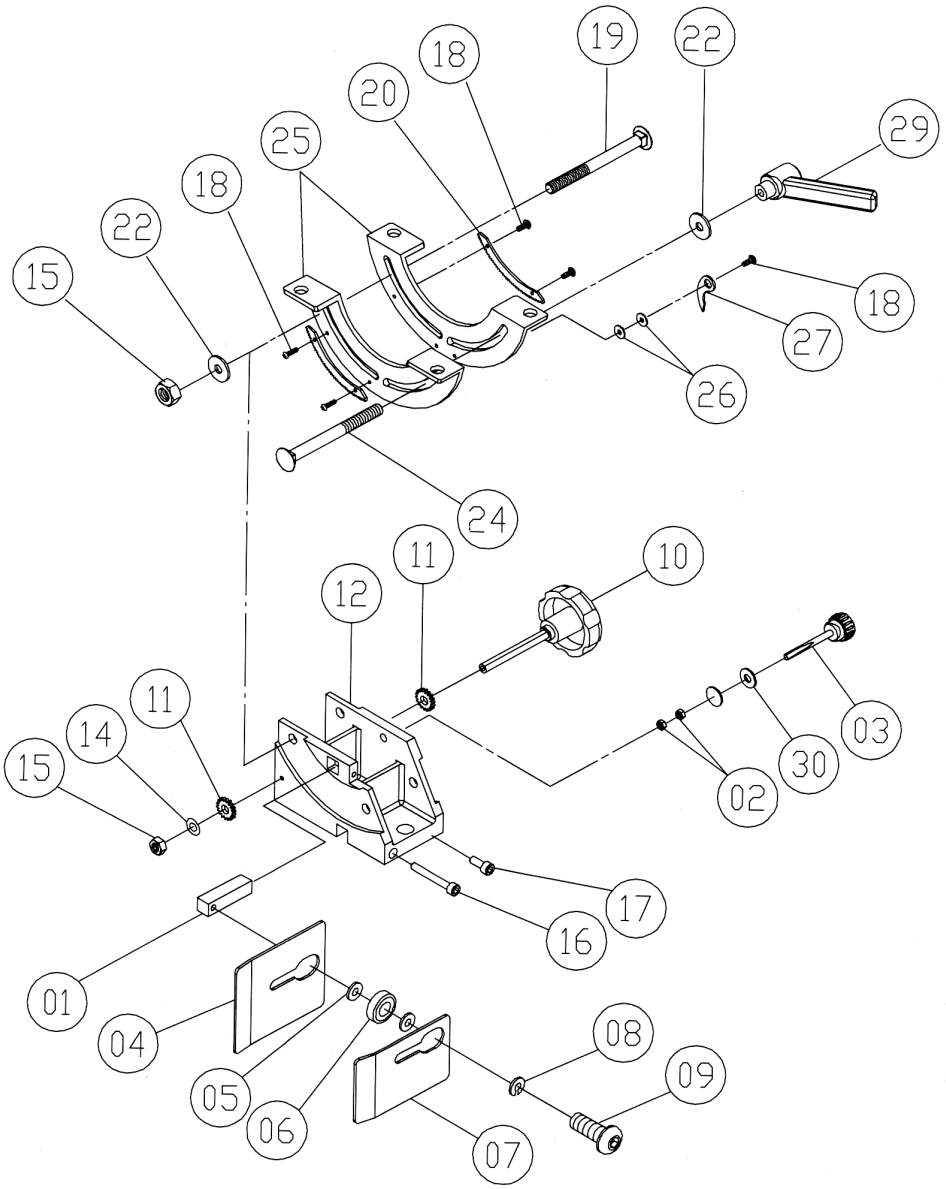

No	Part No	Description	Size	Qty
1	135045	ADJUSTING BLOCK		1
2	NH061000	NUT	M6	2
3	135009	ADJUSTING BAR		1
4	135122	LEFT COVER		1
5	WF102025	FLAT WASHER	M10xΦ20	2
6	BB600002A	BALL BEARING	6000ZZ	1
7	135123	RIGHT COVER		1
8	WS100000	SPRING WASHER	M10	1
9	SJ100500	HEX SOCKET BOTTON HEAD SCREW	M10x25	1
10	135063	KNOB		1
11	135061	SMALL GEAR		2
12	135021	TRUNNION SUPPORT BRACKET		1

14	WS080000	SPRING WASHER	M8	1
15	NL081300	NYLON NUT	M8	2
16	SR061000	HEX HEAD BOLT	M6x50	1
17	SR060400	HEX HEAD BOLT	M6x20	1
18	SP049100	PAN HEAD BOLT	M4x6	5
19	SC081600	CARRIAGE BOLT	M8x80	1
20	135052	GEAR PLATE		2
22	WF081820	FLAT WASHER	M8xΦ18	2
24	SC081700	CARRIAGE BOLT	M8x85	1
25	135025	TRUNNION PLATE		2
26	WF040808	FLAT WASHER	M4xΦ8	2
27	135078	POINTER		1
29	135044	HANDLE		1
30	WF061300	FLAT WASHER	M6xΦ13	2

Continues Over....

Compact Mitre Fence Assembly

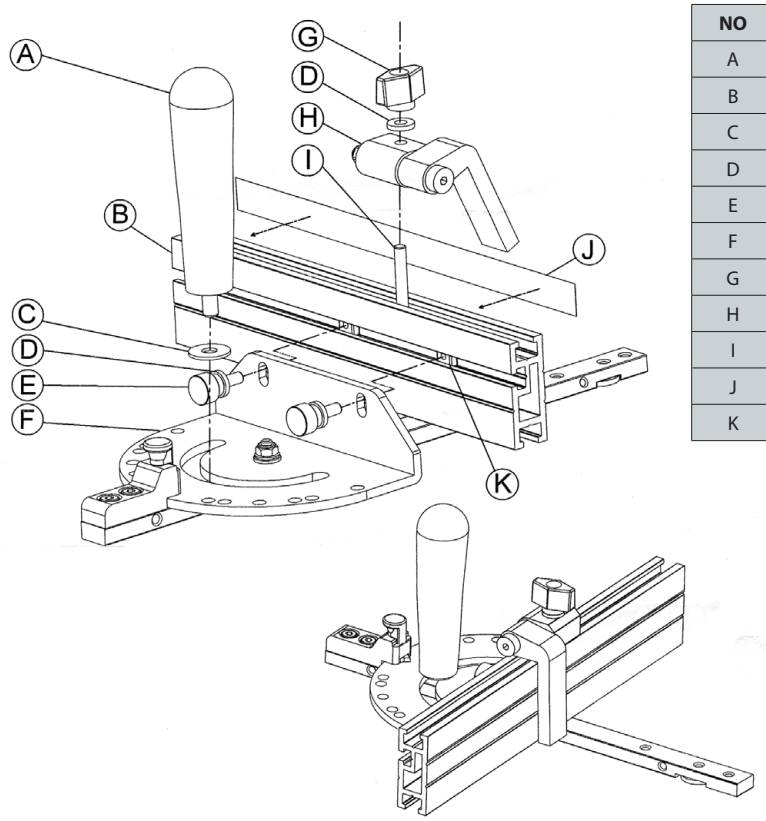

NO	PART DISCRIPTION	QTY
A	HANDLE	1
B	FENCE	1
C	METAL WASHER 1MM	1
D	PVC WASHER 2.5MM	3
E	KNURLING KNOB	2
F	MITRE GAUGE	1
G	DIAMOND KNOB	1
H	3/8" FLIP STOP	1
I	T-SHAPED SCREW	1
J	RULER TAPE	1
K	SQUARE NUT	2

Low Blade Guide Support

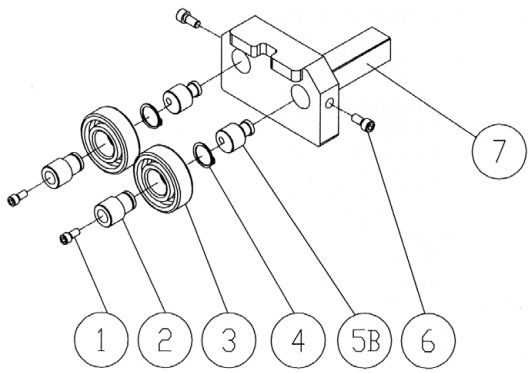

No	Part No	Description	Size	Qty
1	SR060600	HEX SOCKET BOLT	M6x30	2
2	135093	HANDLE BUSHING		2
3	BB620202A	BALL BEARING	6202ZZ	2
4	RS150000	RETAINING RING	S15	2
5B	135090B	BIAS SHAFT		2
6	SR069300	HEX SOCKET BOLT	M6xl6	2
7	135125	LOVER BLADE GUIDE SUPPORT		1

Upper Blade Guide Support

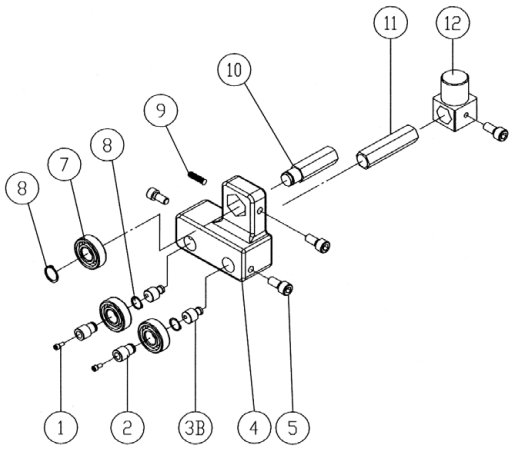

No	Part No	Description	Size	Qty
1	SR060600	HEX SOCKET BOLT	M6x30	2
2	135093	HANDLE BUSHING		2
3B	135090B	BIAS SHAFT		2
4	135091	UPPER BLADE GUIDE SUPPORT		1
5	SR069400	HEX SOCKET BOLT	M6x16	4
7	BB620202	BALL BEARING	6202ZZ	3
8	RS150000	RING	S15	3
9	SS060200	SET BOLT	M6x10	1
10	135060	UPPER SPACING SLEEVE		1
11	135053	ADJUST BAR		1
12	135057	UPPER GUIDE SUPPORT BLOCK		1

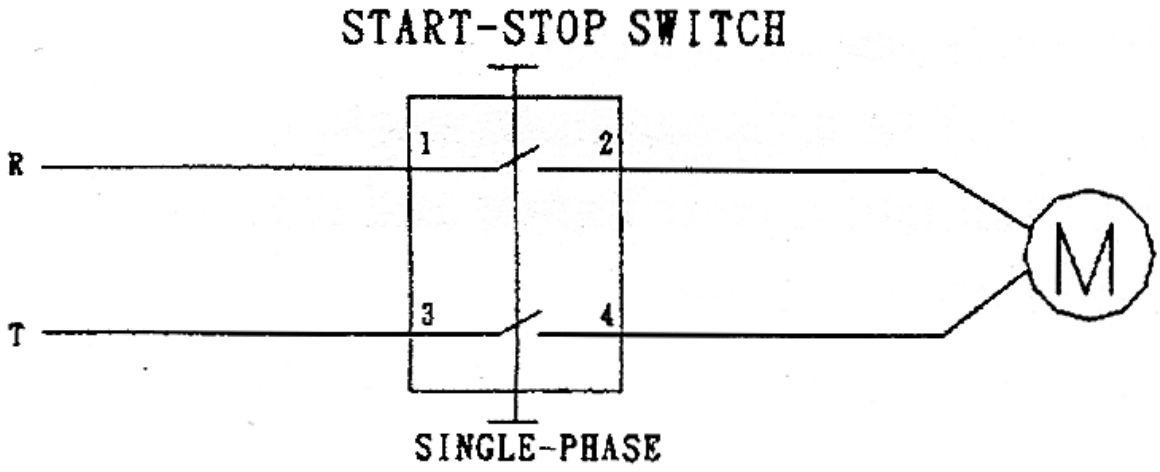

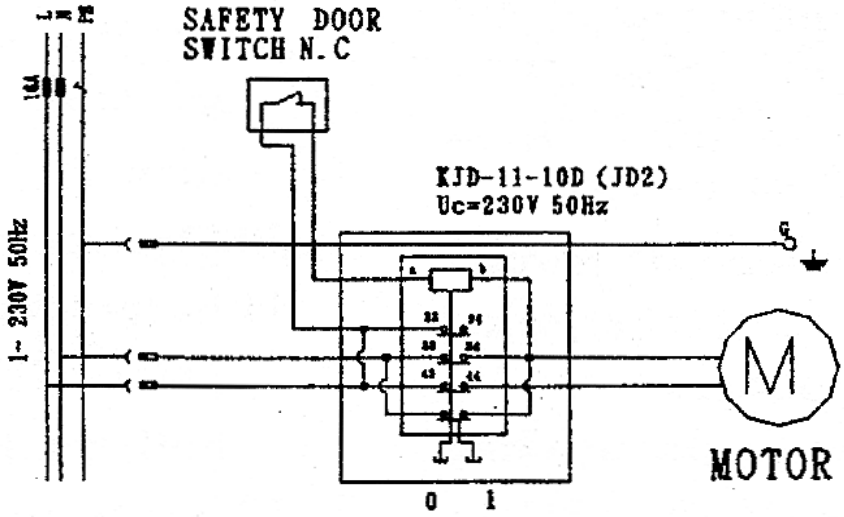

SINGLE-PHASE

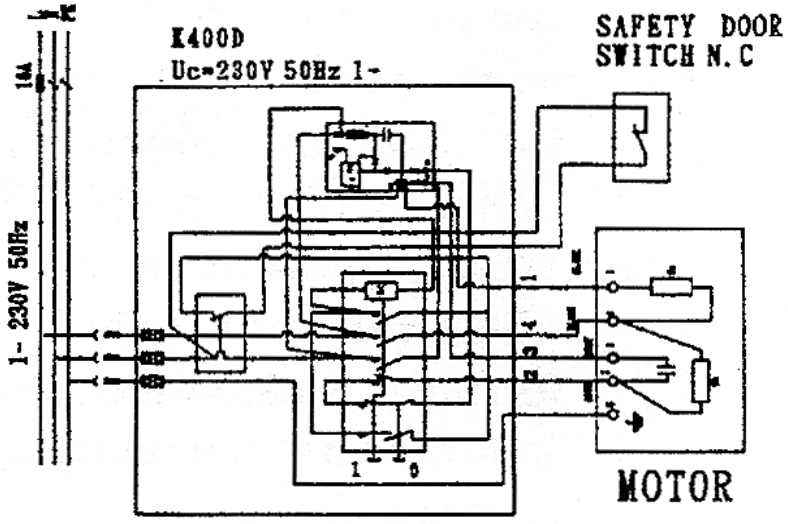

SINGLE-PHASE

The Axminster guarantee

Buy with confidence from Axminster!
So sure are we of the quality, we cover all parts and labour free of charge for three years!

For more information visit **axminstertools.com/3years**

The packaging is suitable for recycling.
Please dispose of it in a responsible manner.

EU Countries Only

Do not dispose of electric tools together with household waste material.
By law they must be collected and recycled separately.

CE UKCA

Axminster Tools, Axminster Devon EX13 5PH
axminstertools.com